Lenovo

ThinkSystem DM7000x
Hardware Installation and Maintenance Guide

Machine Types: 7Y40 and 7Y56

Note

Before using this information and the product it supports, be sure to read and understand the safety information and the safety instructions, which are available at:
http://thinksystem.lenovofiles.com/help/topic/safety_documentation/pdf_files.html

In addition, be sure that you are familiar with the terms and conditions of the Lenovo warranty for your system, which can be found at:
http://datacentersupport.lenovo.com/warrantylookup

Third Edition (March 2023)

© Copyright Lenovo 2019, 2023.

LIMITED AND RESTRICTED RIGHTS NOTICE: If data or software is delivered pursuant to a General Services Administration (GSA) contract, use, reproduction, or disclosure is subject to restrictions set forth in Contract No. GS-35F-05925.

Contents

Contents i

Safety iii

Chapter 1. Introduction 1
Specifications 1
Management software 3
Tech Tips 3
Security advisories 3

Chapter 2. System components. 5
Front view 5
Rear view 6
Rear view LEDs 7

Chapter 3. Rail kit installation instructions 11
DM/DE Series 2U24, 3U, 4U rail kit installation instructions 11
DM/DE Series 2U12 rail kit installation instructions 12

Chapter 4. Hardware replacement procedures 17
Replacing the caching module 17
Shutting down the degraded controller 17
Opening the controller module 18
Replacing or adding a caching module 19
Reinstalling the controller 20
Running system-level diagnostics 21
Completing the replacement process 23
Replacing the NVMEM battery 23
Shutting down the degraded controller 23
Opening the controller module 24
Replacing the NVMEM battery 25
Reinstalling the controller 26
Running system-level diagnostics 27
Completing the replacement process 29
Swapping out a power supply 29
Completing the replacement process 31
Swapping out a fan 31
Completing the replacement process 32
Replacing the controller module 32
Preparing the system for the replacement . . . 33
Shutting down the degraded controller 35
Replacing the controller module hardware . . 36
Restoring and verifying the system configuration 45
Completing system restoration 49
Completing the replacement process 54
Important information after replacing the controller module 54
Replacing a PCIe card 54
Shutting down the degraded controller 54
Opening the controller module 55
Replacing a PCIe card 56
Reinstalling the controller 57
Completing the replacement process 58
Replacing a DIMM 58
Shutting down the degraded controller 58
Opening the controller module 59
Replacing the DIMMs 60
Reinstalling the controller 63
Running system-level diagnostics 63
Completing the replacement process 66
Replacing the boot media 66
Shutting down the degraded controller 67
Opening the controller module 67
Replacing the boot media 68
Transferring the boot image to the boot media 69
Completing the replacement process 72
Replacing the real-time clock battery 72
Shutting down the degraded controller 72
Opening the controller module 73
Replacing the RTC Battery 74
Reinstalling the controller 75
Completing the replacement process 76
Replacing the chassis 76
Shutting down the controller 76
Swapping out a power supply 77
Swapping out a fan 79
Removing the controller module 80
Replacing a chassis from within the equipment rack or system cabinet 81
Installing the controller 82
Verifying and setting the HA state of the chassis 83
Running system-level diagnostics 84
Completing the replacement process 86
Important information after replacing the chassis 86

Chapter 5. System level diagnostics 87

© Copyright Lenovo 2019, 2023

Introduction to system-level diagnostics 87
Requirements for running system-level diagnostics 87
How to use online command-line help 88
Running system installation diagnostics 89
Running system panic diagnostics 92
Running slow system response diagnostics 94
Running hardware installation diagnostics 98
Running device failure diagnostics 101

Appendix A. Getting help and technical assistance 105
Before you call 105
Collecting service data 106
Contacting Support 106

Appendix B. Notice of Privacy Practices 107

Appendix C. Notices. 109
Trademarks 110
Important notes 110
Particulate contamination 110
Telecommunication regulatory statement 111
Electronic emission notices 111
Taiwan region BSMI RoHS declaration 112
Taiwan Region import and export contact information 112

Index 113

Safety

Before installing this product, read the Safety Information.

قبل تركيب هذا المنتج، يجب قراءة الملاحظات الآمنية

Antes de instalar este produto, leia as Informações de Segurança.

在安装本产品之前，请仔细阅读 Safety Information （安全信息）。

安裝本產品之前，請先閱讀「安全資訊」。

Prije instalacije ovog produkta obavezno pročitajte Sigurnosne Upute.

Před instalací tohoto produktu si přečtěte příručku bezpečnostních instrukcí.

Læs sikkerhedsforskrifterne, før du installerer dette produkt.

Lees voordat u dit product installeert eerst de veiligheidsvoorschriften.

Ennen kuin asennat tämän tuotteen, lue turvaohjeet kohdasta Safety Information.

Avant d'installer ce produit, lisez les consignes de sécurité.

Vor der Installation dieses Produkts die Sicherheitshinweise lesen.

Πριν εγκαταστήσετε το προϊόν αυτό, διαβάστε τις πληροφορίες ασφάλειας (safety information).

לפני שתתקינו מוצר זה, קראו את הוראות הבטיחות.

A termék telepítése előtt olvassa el a Biztonsági előírásokat!

Prima di installare questo prodotto, leggere le Informazioni sulla Sicurezza.

製品の設置の前に、安全情報をお読みください。

본 제품을 설치하기 전에 안전 정보를 읽으십시오.

Пред да се инсталира овој продукт, прочитајте информацијата за безбедност.

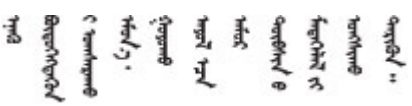

Les sikkerhetsinformasjonen (Safety Information) før du installerer dette produktet.

Przed zainstalowaniem tego produktu, należy zapoznać się z książką "Informacje dotyczące bezpieczeństwa" (Safety Information).

Antes de instalar este produto, leia as Informações sobre Segurança.

© Copyright Lenovo 2019, 2023

Перед установкой продукта прочтите инструкции по технике безопасности.

Pred inštaláciou tohto zariadenia si pečítaje Bezpečnostné predpisy.

Pred namestitvijo tega proizvoda preberite Varnostne informacije.

Antes de instalar este producto, lea la información de seguridad.

Läs säkerhetsinformationen innan du installerar den här produkten.

ཐོན་རྫས་འདི་བདེ་སྤྱོད་མ་བྱས་གོང་། ་སྐོར་གྱི་ཡིད་གཟབ་བྱ་འདྲ་མིན་ཡོད་པའི་འོད་སྡེར་བལྟ་དགོས།

Bu ürünü kurmadan önce güvenlik bilgilerini okuyun.

مەزكۇر مەھسۇلاتنى ئورنىتىشتىن بۇرۇن بىخەتەرلىك ئۇچۇرلىرىنى ئوقۇپ چىقىڭ.

Youq mwngz yungh canjbinj neix gaxgonq, itdingh aeu doeg aen canjbinj soengq cungj vahgangj ancien siusik.

Chapter 1. Introduction

This chapter provides a brief introduction to your system. This chapter contains information about product specifications, management software, tech tips, and security advisories.

Specifications

The following information is a summary of the specifications of the system. Depending on the model, some specifications might not apply.

Table 1. Specifications

Specification	Description
Dimension	• 3U • Height: 130 mm (5.12 inches) • Width: – With mounting flanges: 482 mm (18.98 inches) – Without mounting flanges: 447 mm (17.6 inches) • Depth: – With cable management arm: 735 mm (28.94 inches) – Without cable management arm: 608 mm (23.94 inches)
Clearance dimension	• Front: – For cooling: 150 mm (5.91 inches) – For maintenance: 760 mm (29.94 inches) • Rear: – For cooling: 150 mm (5.91 inches) – For maintenance: 510 mm (20.09 inches)
Weight (with two controllers)	34.473 kg (76 lb)
Processor	Two 64 bit 16-core 1.7 GHz processors
DIMM	• Total capacity: 256 GB • Eight 32 GB DIMMs • NVRAM/NVMEM used capacity: 16 GB
System fans	Three hot-swap fans
Power supplies	Two hot-swap power supplies for redundancy support
PCIe slots	Four PCIe slots in the rear

© Copyright Lenovo 2019, 2023

Table 1. Specifications (continued)

Specification	Description
Input/Output (I/O) features	The system (with two controllers) has the following I/O ports: • Eight 12 Gb MiniSAS HD ports • Four 10 Gb SFP+ Ethernet ports • Eight 10 Gb/16 Gb UTA2 SFP+ ports • Four 10 Gb RJ45 Ethernet ports • Two RJ45 ports for remote system management • Two host USB Type-A connectors • Two RJ45 console ports • Two Micro-B USB console ports
Power input	• Input voltage low range: – Minimum: 100 V ac – Maximum: 120 V ac • Input voltage high range: – Minimum: 200 V ac – Maximum: 240 V ac
Environment	The system is supported in the following environment: • Air temperature: – Operating: 5–45°C (41–113°F) – Storage or shipping: -40–70°C (-40–158°F) • Relative humidity: – Operating: 8%–90% – Storage or shipping: 10%–95% • Maximum altitude: – Operating: 3048 m (10000 ft) – Storage: 12 192 m (40000 ft) – Shipping: 12 192 m (40000 ft)

Management software

ONTAP is available for managing your system. For detailed information about how to use ONTAP, go to: http://thinksystem.lenovofiles.com/help/topic/ontap_software/overview.html

Tech Tips

Lenovo continually updates the support website with the latest tips and techniques that you can use to solve issues that you might have with your system. These Tech Tips (also called retain tips or service bulletins) provide procedures to work around issues related to the operation of your system.

To find the Tech Tips available for your system:

1. Go to http://datacentersupport.lenovo.com and navigate to the support page for your system.
2. Click **How-tos & Solutions**. Expand **Symptom** to choose a category for the type is problem that you are having.

Security advisories

Lenovo is committed to developing products and services that adhere to the highest security standards in order to protect our customers and their data. When potential vulnerabilities are reported, it is the responsibility of the Lenovo Product Security Incident Response Team (PSIRT) to investigate and provide information to our customers so they may put mitigation plans in place as we work toward providing solutions.

The list of current advisories is available at the following site:

https://datacentersupport.lenovo.com/product_security/home

Chapter 2. System components

Use the information in this section to learn about each of the components associated with your system.

Front view

Front view with bezel

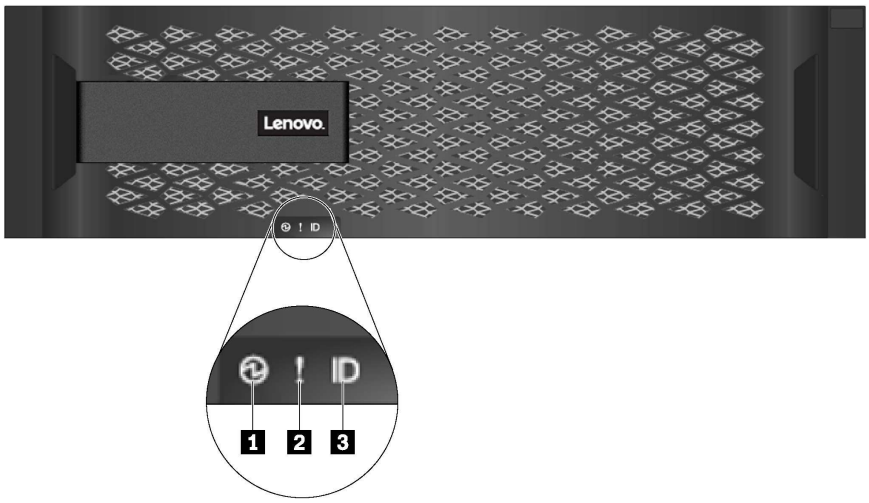

Figure 1. Front view with bezel

Table 2. Components on the front bezel

LED	Status	Description
1 Chassis power LED	Solid green	One or two of the power supply is delivering power to the system.
	Off	No power supply is delivering power to the system.
2 Chassis attention LED (front)	Solid amber	The system stops working or there is an error on the system.
	Off	The system is operating normally.
3 Chassis location LED (front)	Solid blue or blinking blue	The chassis location LED is manually activated to help locating the system.
	Off	The chassis location LED is not activated.

© Copyright Lenovo 2019, 2023

Front view without bezel

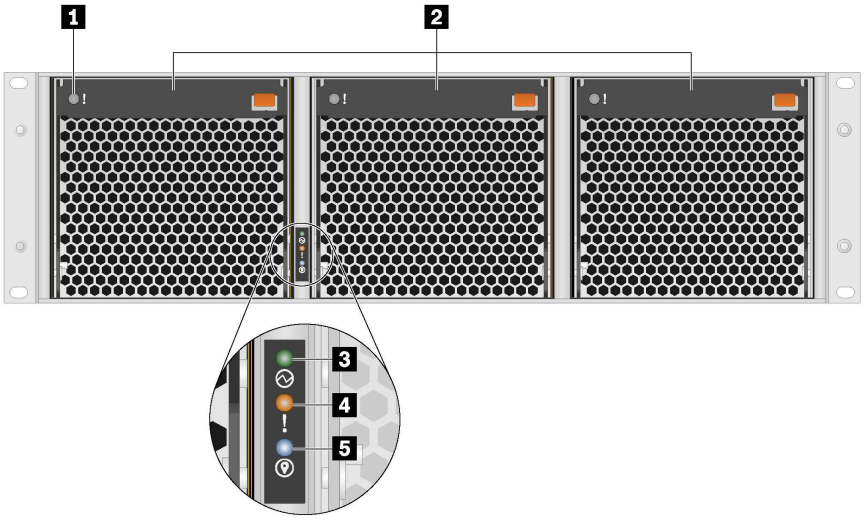

Table 3. Components on the front of the system (without bezel)

1 Fan attention LED (3)	2 System fans (3)	3 Chassis power LED
4 Chassis attention LED (front)	5 Chassis location LED (front)	

Rear view

The rear of the system provides access to several connectors and components, including the power supplies and various connectors.

Rear view

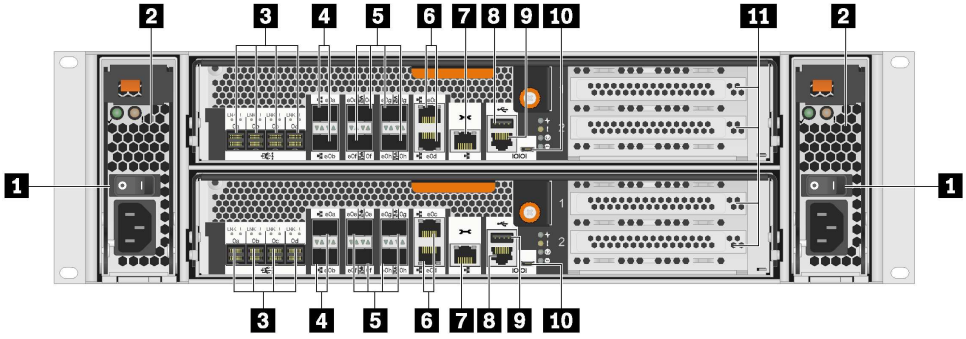

Figure 2. Rear view

Table 4. Components on the rear of the system

1 Power supply buttons (2)	2 Power supplies (2)
3 MiniSAS HD ports (8)	4 SFP+ Ethernet ports (4)
5 UTA2 SFP+ ports (8)	6 RJ45 Ethernet ports (4)
7 RJ45 management ports (2)	8 Host USB Type-A connectors (2)
9 RJ45 console ports (2)	10 Micro-B USB console ports (2)
11 PCIe slots (4)	

Rear view LEDs

The rear of the system provides system LEDs.

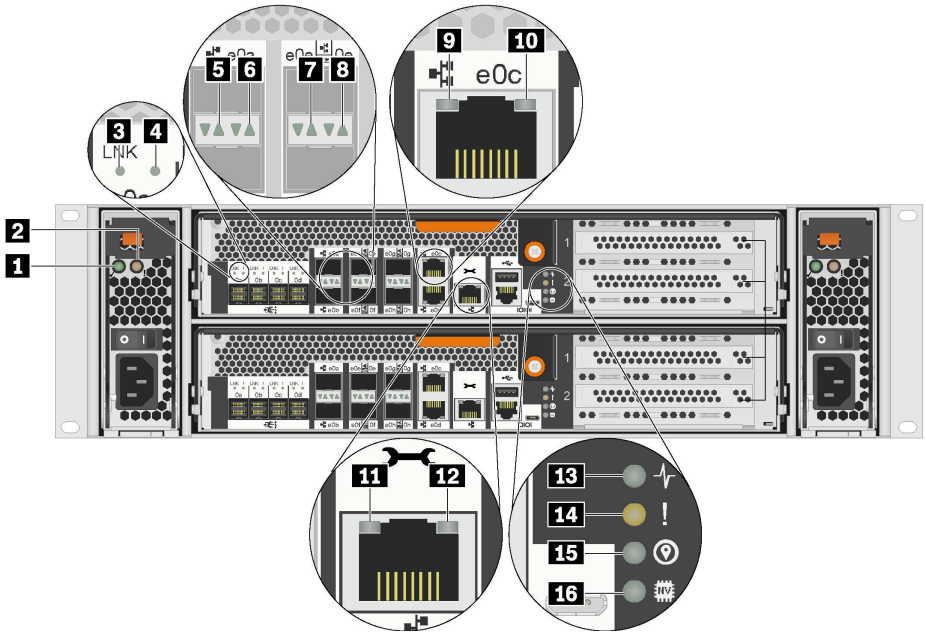

Figure 3. Rear view LEDs

Table 5. LEDs on the rear of the system

1 AC power good LED (2)	2 Power supply attention LED (2)
3 MiniSAS HD port link LED (8)	4 MiniSAS HD port attention LED (8)
5 SFP+ Ethernet port link LED (4)	6 SFP+ Ethernet port attention LED (4)
7 UTA2 SFP+ port link LED (4)	8 UTA2 SFP+ port attention LED (4)
9 RJ45 Ethernet port link LED (4)	10 RJ45 Ethernet port activity LED (4)
11 RJ45 management port link LED (2)	12 RJ45 management port activity LED (2)
13 Controller activity LED (2)	14 Controller attention LED (2)
15 Controller location LED (2)	16 NVRAM LED (2)

1 AC power good LED

Status	Color	Description
On	Green	AC power is present and good.
Off	None	AC power is not detected.

2 Power supply attention LED

Status	Color	Description
On	Amber	No AC power is present or power supply is failed.
Off	None	AC power is present.

3 4 MiniSAS HD port LEDs

Each MiniSAS HD port has two status LEDs.

Ethernet status LED	Color	Status	Description
3 MiniSAS HD port link LED	Green	On	Link is established on at least one external SAS lane.
	None	Off	No link is established on any external SAS lane.
4 MiniSAS HD port attention LED	Yellow	On	SAS link requires attention.
	None	Off	SAS link operates normally.

5 6 SFP+ Ethernet port LEDs

Each SFP+ Ethernet port has two status LEDs.

Ethernet status LED	Color	Status	Description
5 SFP+ Ethernet port link LED	Green	On	A connection is established on the port.
	None	Off	No connection is established on the port.
6 SFP+ Ethernet port attention LED	Amber	On	The port requires attention.
	None	Off	The port operates normally.

7 8 UTA2 SFP+ port LEDs

Each UTA2 SFP+ port has two status LEDs.

Ethernet status LED	Color	Status	Description
7 UTA2 SFP+ port link LED	Green	On	A connection is established on the port.
	None	Off	No connection is established on the port.
8 UTA2 SFP+ port attention LED	Amber	On	The port requires attention.
	None	Off	The port operates normally.

9 10 RJ45 Ethernet port LEDs

Each RJ45 Ethernet port has two status LEDs.

Ethernet status LED	Color	Status	Description
9 RJ45 Ethernet port link LED	Green	On	A connection is established on the port.
	None	Off	No connection is established on the port.
10 RJ45 Ethernet port activity LED	Amber	Blinking	Traffic is flowing over the connection.
	None	Off	No traffic is flowing over the connection.

11 12 RJ45 management port LEDs

Each RJ45 management port has two status LEDs.

Ethernet status LED	Color	Status	Description
11 RJ45 management port link LED	Green	On	A link is established between the port and some upstream device.
	None	Off	No link is established.
12 RJ45 management port activity LED	Amber	Blinking	Traffic is flowing over the connection.
	None	Off	No traffic is flowing over the connection.

13 Controller activity LED

Status	Color	Description
On	Green	The controller is active.
Off	None	The controller is off.

14 Controller attention LED

Status	Color	Description
On	Yellow	The controller requires attention.
Off	None	The controller operates normally.

15 Controller location LED

Status	Color	Description
On or blinking	Blue	The controller location LED is manually activated to help locating the controller.
Off	None	The chassis location LED is not activated.

16 NVRAM LED

Status	Color	Description
Blinking	Green	IO is being written to local flash memory.
On	Green	Data is in cache and has not been written to local disks.
Off	None	No data is in cache that needs to be written to local disks.

Chapter 3. Rail kit installation instructions

This chapter includes information about rail kit installation instructions.

DM/DE Series 2U24, 3U, 4U rail kit installation instructions

The Rail can be either installed on a standard square-hole four-post rack or a standard round-hole four-post rack by using the round-to-square hole adaptor brackets. Before you begin, verify that you have the correct rail type by examining the PN label located on the rail (PN: SM17A38397).

Installing Rail to square-hole four-post rack

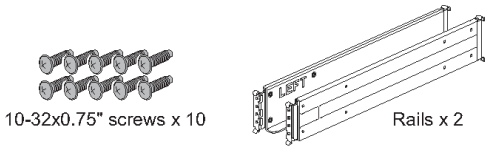

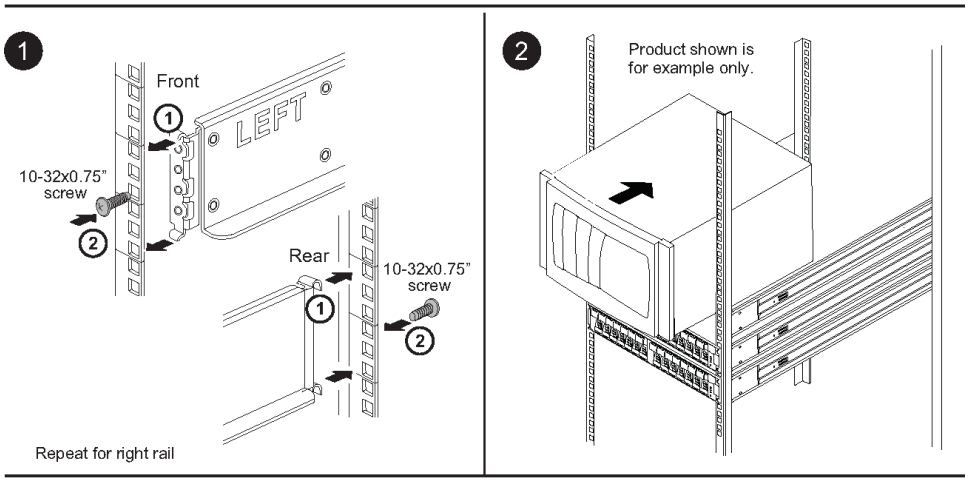

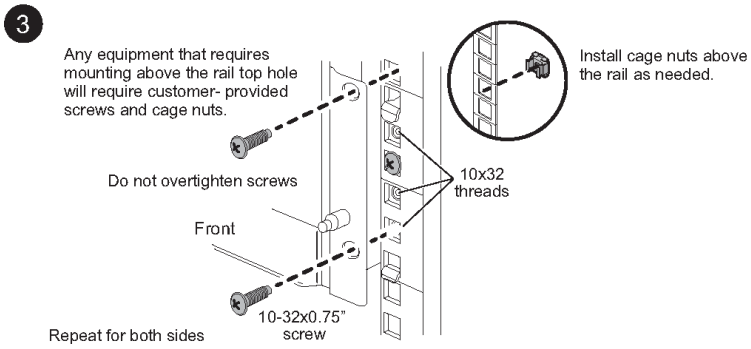

© Copyright Lenovo 2019, 2023

Installing Rail to round-hole four-post rack

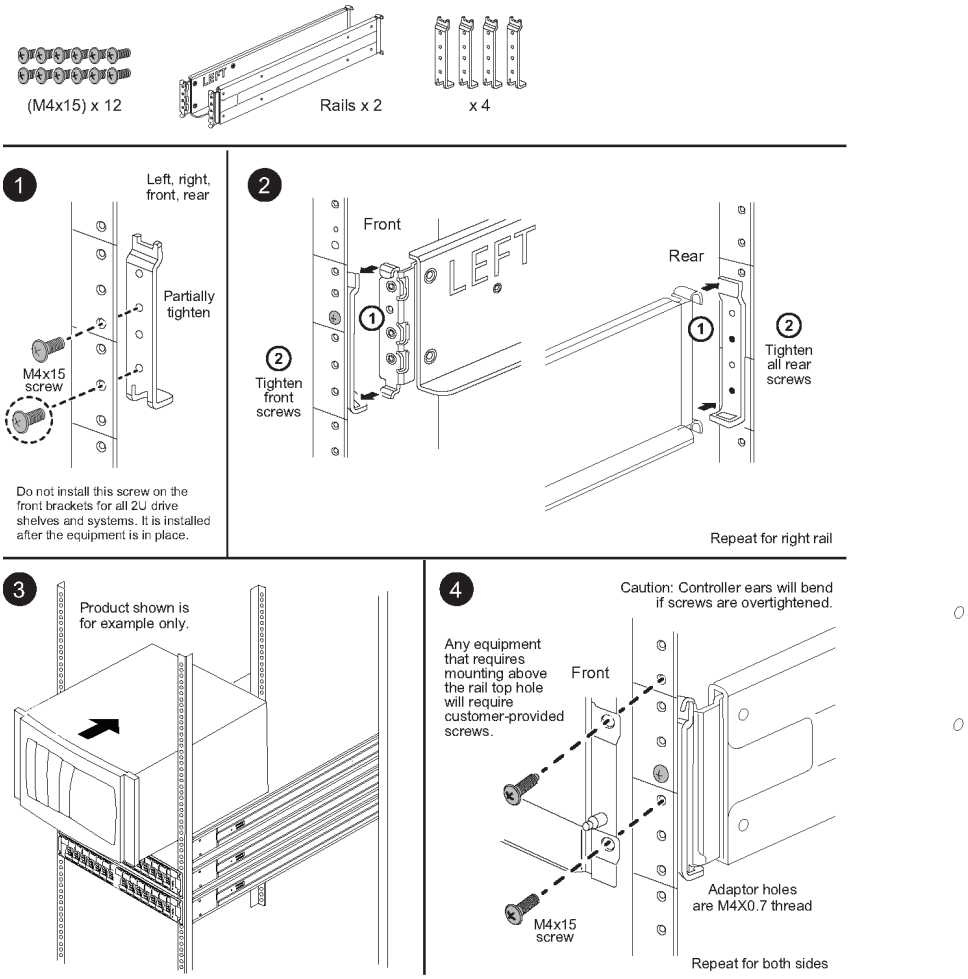

DM/DE Series 2U12 rail kit installation instructions

Using this rail kit, a 2U 12-drive enclosure can be installed in a four-post rack.

Before you begin

The rail kit includes the following items:

- A pair of slide rails for four-post racks with alignment screws installed for the square-hole rack
- (Optional) rack alignment guide tool
- Flat-head M5 screws pre-installed in rails, qty 8
- Round-head M5 screws pre-installed in rails, qty 2
- Alignment screws

Verify that you have the correct rail type by examining the PN label located on the outer box for the following:

- **Four-Post:** SM17A38396

The kit includes the following types of screws:

Type of hardware	Description	Quantity
Flat-head M5 screw; 14 mm long	You use six M5 screws for attaching the rails to the rack, and two M5 screws for attaching the brackets at the back of the enclosure to the brackets at the back of the rails.	8
Round-head M5 screw; 12 mm long	You use these screws to attach the enclosure to the rails.	2
Alignment screws for racks with square holes 9.4 mm (head) X 7.5 mm (length)	The 9.4mm head screws align the rails in the square-hole rack, 2 in each of 4 corners. **Note:** Alignment screws for square-hole racks come pre-installed in the rails.	8
Alignment screws for racks with round holes 7 mm (head) X 7.5 mm (length)		8

About this Procedure

- You can install the enclosure in either a square-hole or round-hole rack.
- You must use only the screws that are provided in the kit.

Step 1. Determine where you want to install the enclosure in the rack.Use the rack alignment guide tool to ensure that you install the enclosure at the same level on either post of the rack.

Note: When possible, install enclosures starting at the bottom of the rack and working up, so that you can use the enclosures underneath as a guide for installing the next set of rails.

Step 2. Remove the M5 screws from each of the rail ends and the side brackets and saved. Make sure to leave the 8 outer alignment screws (9.4mm head for the square-hole rack) in the rail flanges for proper alignment in the rack.

a. If you have a round-hole rack, remove the eight pre-installed square-hole rack alignment screws and install the eight round-hole rack alignment screws.

Note: Ensure that you use the screws that are appropriate for your rack.

b. Place the rail inside the rack where you want to install the enclosure, and align the alignment screws on the rail with the holes on the front post of the rack.

c. Extend the rail to the back post of the rack until the flanges on the rail touch the inside of the rack.

d. Insert one flat-head M5 screw through the hole in the front of the rack, and two flat-head M5 screws through the holes at the back of the rack.

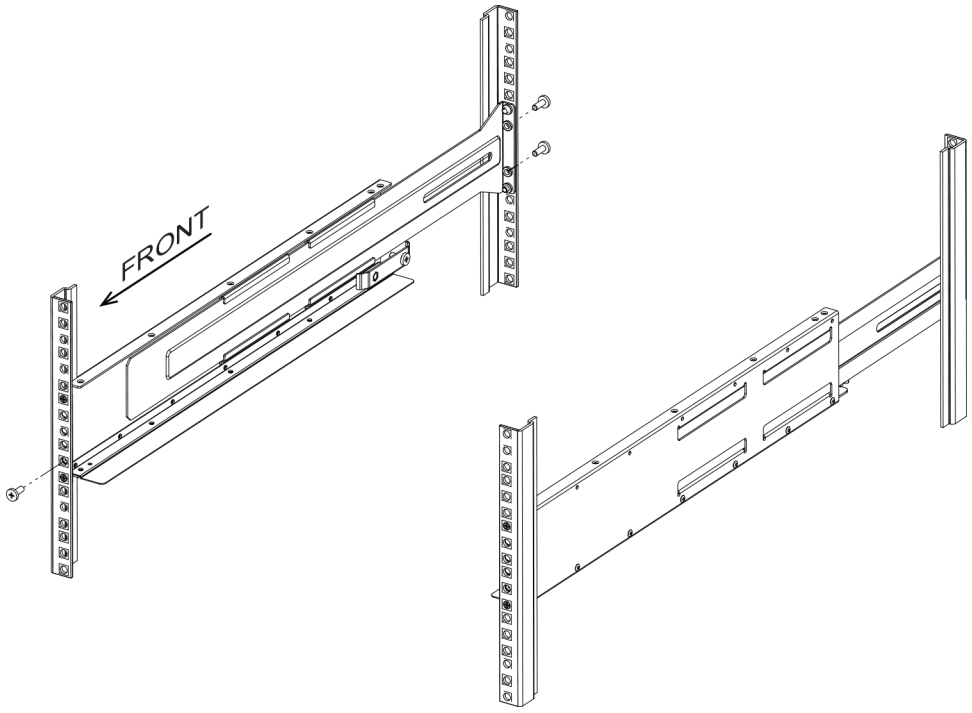

e. Repeat these steps for the other rail.

Step 3. Place the back of the enclosure (the end with the connectors) on the rails.

Attention: A fully loaded enclosure weighs approximately 65 lb (29 kg). Two persons are required to safely move the enclosure.

Step 4. Carefully slide the enclosure all the way onto the rails.

Note: If applicable, you might need to remove the shelf end caps or the system bezel to secure the enclosure to the rack post; if so, you need to replace the end caps or bezel when you are done.

Attention:

- You might need to adjust the rails to ensure that the enclosure slides all the way onto the rails.
- Two M5 screws are used to secure the enclosure to the back of the rails. You might need to remove the M5 screws on the inner rail to ensure that the enclosure slides all the way back.

Attention: Do not place additional equipment on the rails after you finish installing the enclosure. The rails are not designed to bear additional weight.

Step 5. Secure the enclosure to the front of the rack and rails by inserting two round-head M5 screws through the mounting brackets (pre-installed on either side of the front of the enclosure), the holes on the rack, and the holes on the front of rails.

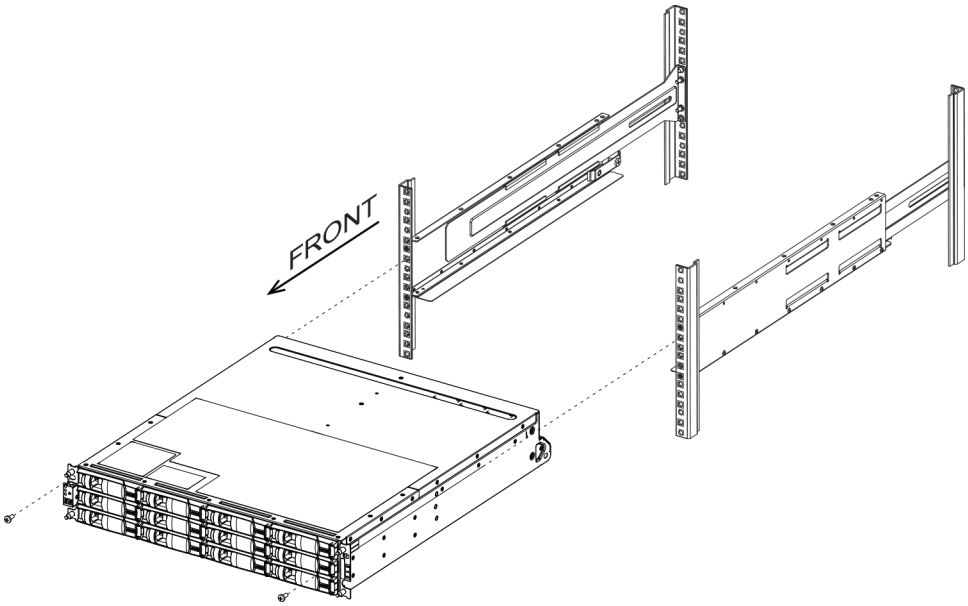

Step 6. Secure the enclosure to the back of the rails by inserting two M5 screws through the brackets at the enclosure and the rail kit bracket.

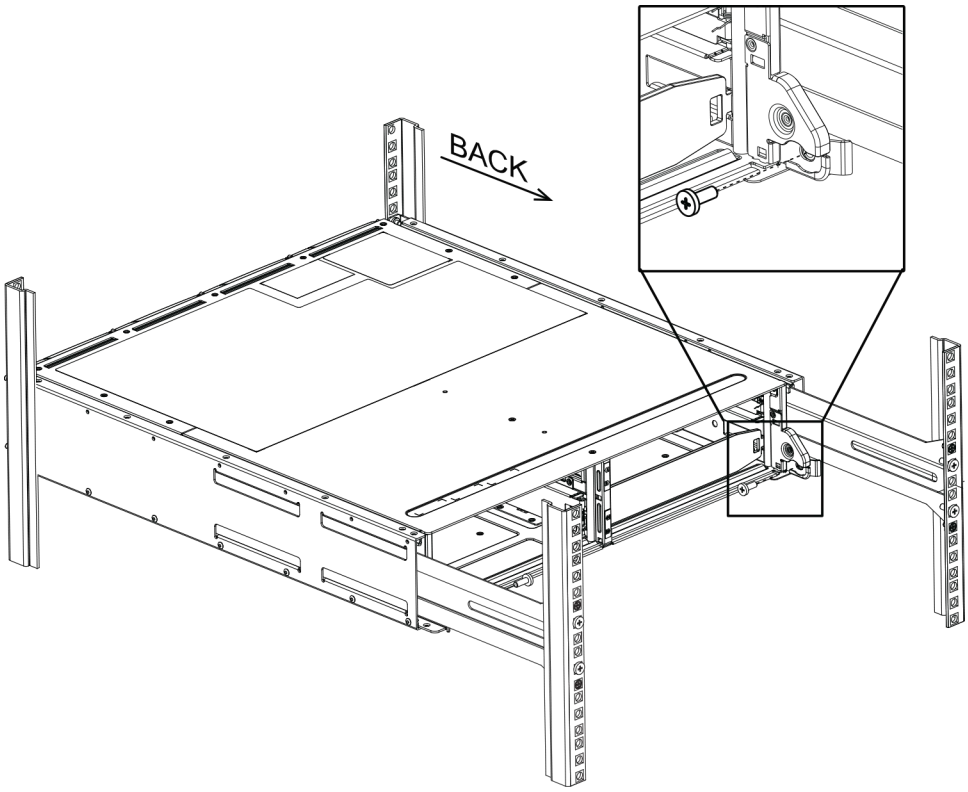

Step 7. If applicable, replace the shelf end caps or the system bezel.

Step 8. See the appropriate installation instructions or upgrade guide for your shelf or system to complete the installation and setup tasks. Documentation can be found on the ThinkSystem documentation Information Center at:
http://thinksystem.lenovofiles.com/help/index.jsp

Chapter 4. Hardware replacement procedures

Replacing the caching module

You must replace the caching module in the controller module when your system registers a single AutoSupport (ASUP) message that the module has gone offline; failure to do so results in performance degradation.

Before you begin

All other components in the system must be functioning properly; if not, you must contact technical support.

You must replace the failed component with a replacement FRU component you received from your provider.

Shutting down the degraded controller

You can shut down or take over the degraded controller using different procedures, depending on the storage system hardware configuration.

Shutting down the controller

To shut down the degraded controller, you must determine the status of the controller and, if necessary, take over the controller so that the healthy controller continues to serve data from the degraded controller storage.

Before you begin

- If you have a cluster with more than two controllers, check the health and Epsilon from advanced mode: `cluster show -epsilon*`
- If the cluster is not in quorum or a controller that is not the degraded controller shows `false` for eligibility and health, correct the issue before proceeding to the next step.
- If Epsilon resides in the degraded controller:
  1. Remove Epsilon from the degraded controller: `cluster modify -node degraded_node -epsilon false`
  2. Assign Epsilon to a healthy controller in the cluster: `cluster modify -node healthy_node -epsilon true`

You might want to erase the contents of your caching module before replacing it.

Step 1. Although data on the caching module is encrypted, you might want to erase any data from the impaired caching module and verify that the caching module has no data:

   a. Erase the data on the module: `system controller flash-cache secure-erase run [-slot] slot#`

   b. Verify that the data has been erased from the module: `system controller flash-cache secure-erase show -node node_name`

      The output should display the caching module status as `erased`.

Step 2. Disable automatic giveback from the console of the healthy controller using the following command: `storage failover modify -node local -auto-giveback false`

Step 3. Take the degraded controller to the LOADER prompt by typing: `storage failover takeover <degraded controller name>` from the RJ45 Management Port of the degraded controller.

© Copyright Lenovo 2019, 2023

If the degraded controller is displaying...	Then...
The LOADER prompt	Go to the next step.
`Waiting for giveback...`	Press Ctrl-C, and then respond `y` when prompted.
System prompt or password prompt	Take over or halt the degraded controller: • Take over the degraded controller from the healthy controller: `storage failover takeover -ofnode` *impaired_node_name* When the degraded controller shows `Waiting for giveback...`, press Ctrl-C, and then respond `y`.

Step 4. If the system is in a dual-chassis HA pair, turn off the power supplies, and then unplug the degraded controller's power cords from the power source.

Opening the controller module

To access components inside the controller, you must first remove the controller module from the system and then remove the cover on the controller module.

About this task

A video for this task is available at:

- YouTube: https://www.youtube.com/playlist?list=PLYV5R7hVcs-CZwRXsocAOmi5RsaXDVZQG

Step 1. If you are not already grounded, properly ground yourself.

Step 2. Loosen the hook and loop strap binding the cables to the cable management device, and then unplug the system cables and SFPs (if needed) from the controller module, keeping track of where the cables were connected. Leave the cables in the cable management device so that when you reinstall the cable management device, the cables are organized.

Step 3. Remove and set aside the cable management devices from the left and right sides of the controller module.

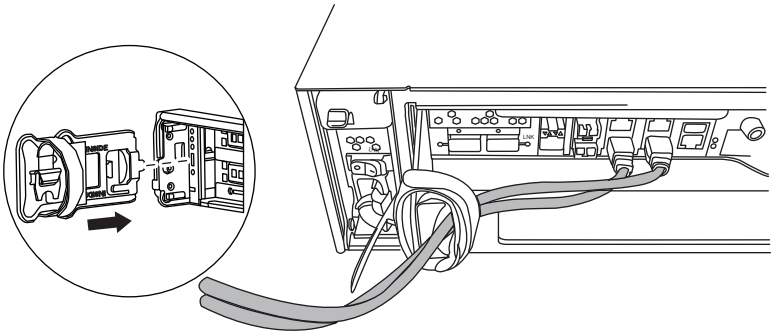

Step 4. Loosen the thumbscrew on the cam handle on the controller module.

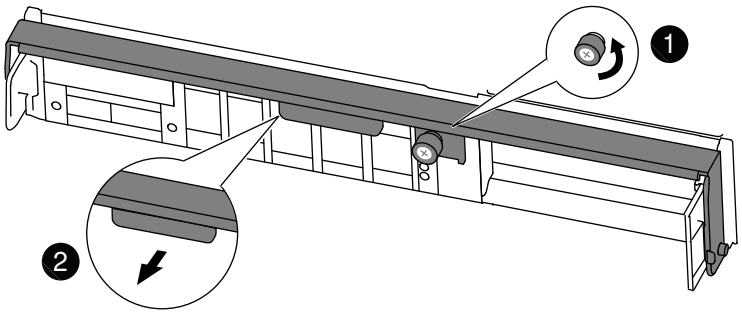

1	Thumbscrew
2	Cam handle

Step 5. Pull the cam handle downward and begin to slide the controller module out of the chassis. Make sure that you support the bottom of the controller module as you slide it out of the chassis.

Replacing or adding a caching module

To replace or add a caching module referred to as the M.2 PCIe card on the label on your controller, locate the slots inside the controller and follow the specific sequence of steps.

Before you begin

Your storage system must meet certain criteria depending on your situation:

- It must have the appropriate operating system for the caching module you are installing.
- It must support the caching capacity.
- If you are adding a caching module, it must support the additional capacity as well as the caching module capacity. Lenovo Press
- All other components in the storage system must be functioning properly; if not, you must contact technical support.

About this task

A video for this task is available at:

- YouTube: https://www.youtube.com/playlist?list=PLYV5R7hVcs-CZwRXsocAOmi5RsaXDVZQG

Step 1. If you are not already grounded, properly ground yourself.

Step 2. Locate the caching module at the rear of the controller module and remove it.

a. Press the release tab.

b. Remove the heatsink. The storage system comes with two slots available for the caching module and only one slot is occupied, by default.

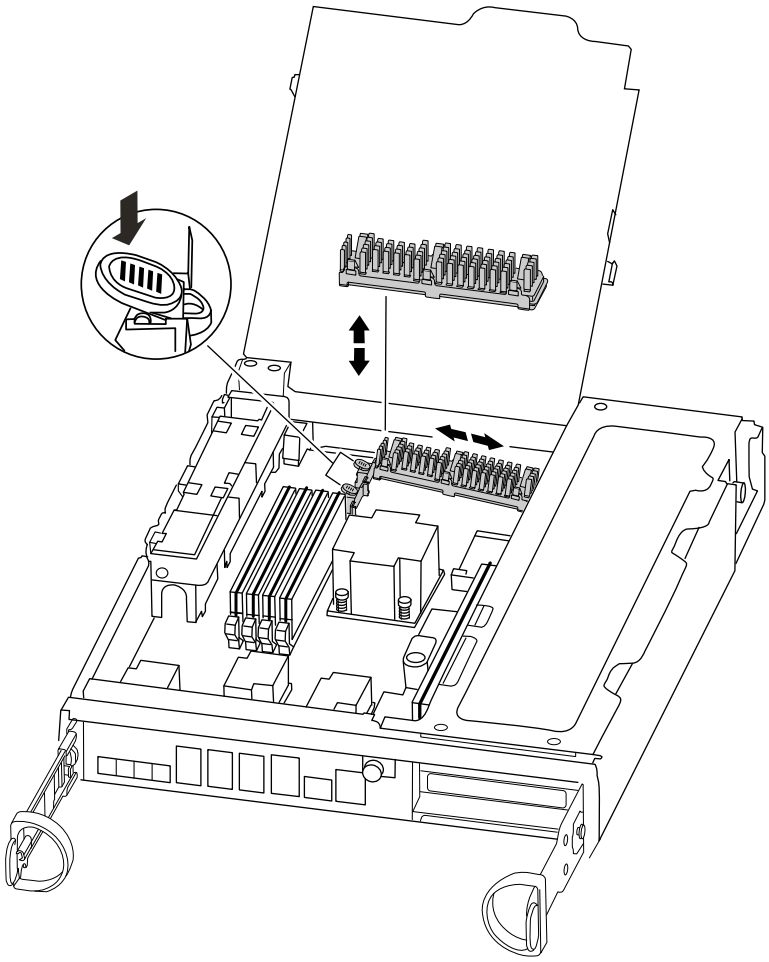

Step 3. If you are adding a caching module, go to the next step; if you are replacing the caching module, gently pull it straight out of the housing.

Step 4. Align the edges of the caching module with the socket in the housing, and then gently push it into the socket.

Step 5. Verify that the caching module is seated squarely and completely in the socket. If necessary, remove the caching module and reseat it into the socket.

Step 6. Reseat and push the heatsink down to engage the locking button on the caching module housing.

Step 7. Repeat the steps if you have a second caching module. Close the controller module cover, as needed.

Reinstalling the controller

After you replace a component within the controller module, you must reinstall the controller module in the system chassis and boot it to a state where you can run diagnostic tests on the replaced component.

About this task

A video for this task is available at:

- YouTube: https://www.youtube.com/playlist?list=PLYV5R7hVcs-CZwRXsocAOmi5RsaXDVZQG

Step 1. If you are not already grounded, properly ground yourself.

Step 2. Align the end of the controller module with the opening in the chassis, and then gently push the controller module halfway into the system.

Note: Do not completely insert the controller module in the chassis until instructed to do so.

Step 3. Recable the system, as needed.If you removed the media converters (SFPs), remember to reinstall them if you are using fiber optic cables.

Step 4. Complete the reinstallation of the controller module: The controller module begins to boot as soon as it is fully seated in the chassis. Be prepared to interrupt the boot process.

a. With the cam handle in the open position, firmly push the controller module in until it meets the midplane and is fully seated, and then close the cam handle to the locked position.

Attention: Do not use excessive force when sliding the controller module into the chassis; you might damage the connectors.

b. Tighten the thumbscrew on the cam handle on back of the controller module.

c. If you have not already done so, reinstall the cable management device.

d. Bind the cables to the cable management device with the hook and loop strap.

e. As each controller starts the booting, press `Ctrl-C` to interrupt the boot process when you see the message `Press Ctrl-C for Boot Menu`.

f. Select the option to boot to Maintenance mode from the displayed menu.

Running system-level diagnostics

After installing a new caching module, you should run diagnostics.

Before you begin

Your system must be at the LOADER prompt to get to the maintenance menu to start System Level Diagnostics.

All commands in the diagnostic procedures are issued from the controller where the component is being replaced.

Step 1. If the controller to be serviced is not at the LOADER prompt, perform the following steps:

a. Select the option to boot to Maintenance mode by typing: `halt`

b. Once at the LOADER prompt, type `boot_ontap menu`

c. When the system appears at the selection menu, choose option 5 to go into Maintenance mode.

Step 2. Run diagnostics on the caching module: `sldiag device run -dev fcache`

Step 3. Verify that no hardware problems resulted from the replacement of the caching module: `sldiag device status -dev fcache -long -state failed`
System-level diagnostics returns you to the prompt if there are no test failures, or lists the full status of failures resulting from testing the component.

Step 4. Proceed based on the result of the preceding step:

<table>
<tr><th>If the system-level diagnostics tests...</th><th>Then...</th></tr>
<tr><td>Were completed without any failures</td><td>

Clear the status logs: <code>sldiag device clearstatus</code>
Verify that the log was cleared: <code>sldiag device status</code>

The following default response is displayed:

<code>SLDIAG: No log messages are present.</code>
Exit Maintenance mode: <code>halt</code>

The controller displays the LOADER prompt.
Boot the controller from the LOADER prompt: <code>boot_ontap</code>
Return the controller to normal operation:

<table>
<tr><th>If your controller is in...</th><th>Then...</th></tr>
<tr><td>An HA pair</td><td>Perform a give back: <code>storage failover giveback -ofnode</code> replacement_node_name</td></tr>
</table>

You have completed system-level diagnostics.
</td></tr>
<tr><td>Resulted in some test failures</td><td>
Determine the cause of the problem:

Exit Maintenance mode: <code>halt</code>

After you issue the command, wait until the system stops at the LOADER prompt.
Turn off or leave on the power supplies, depending on how many controller modules are in the chassis:

If you have two controller modules in the chassis, leave the power supplies turned on to provide power to the other controller module.
If you have one controller module in the chassis, turn off the power supplies and unplug them from the power sources.

Verify that you have observed all the considerations identified for running system-level diagnostics, that cables are securely connected, and that hardware components are properly installed in the storage system.
Boot the controller module you are servicing, interrupting the boot by pressing

</td></tr>
</table>

If the system-level diagnostics tests...	Then...
	`Ctrl-C` when prompted to get to the Boot menu: • If you removed the controller in the previous step, fully seat the controller module you are servicing in the chassis. The controller module boots up when fully seated. 5. Select Boot to maintenance mode by typing: `boot_diags` 6. Repeat all of the steps necessary to perform the system level diagnostics for the cache module. 7. Exit Maintenance mode by entering the following command: `halt` After you issue the command, wait until the system stops at the LOADER prompt. 8. Rerun the system-level diagnostic test.

Completing the replacement process

After you replace the part, you can return the failed part to Lenovo, as described in the RMA instructions shipped with the kit. Contact technical support at Lenovo Data Center Support if you need the RMA number or additional help with the replacement procedure.

Replacing the NVMEM battery

To replace an NVMEM battery in the system, you must remove the controller module from the system, open it, replace the battery, and close and reinstall the controller module.

All other components in the system must be functioning properly; if not, you must contact technical support.

Shutting down the degraded controller

You can shut down or take over the degraded controller using different procedures, depending on the storage system hardware configuration.

Shutting down the controller

To shut down the degraded controller, you must determine the status of the controller and, if necessary, take over the controller so that the healthy controller continues to serve data for the degraded controller's storage.

Before you begin

- If you have a cluster with more than two controllers, check the health and Epsilon from advanced mode: `cluster show -epsilon*`
- If the cluster is not in quorum or a controller that is not the degraded controller shows `false` for eligibility and health, correct the issue before proceeding to the next step.

Step 1. If Epsilon resides in the degraded controller:

a. Remove Epsilon from the degraded controller: `cluster modify -node` *impaired_node* `-epsilon false`

b. Assign Epsilon to a healthy controller in the cluster: `cluster modify -node` *healthy_node* `-epsilon true`

Step 2. Disable automatic giveback from the console of the healthy controller using the following command: `storage failover modify -node local -auto-giveback false`

Step 3. Take the degraded controller to the LOADER prompt by typing: `storage failover takeover <degraded controller name>` from the RJ45 Management Port of the degraded controller.

If the degraded controller is displaying...	Then...
The LOADER prompt	Go to the next step.
`Waiting for giveback...`	Press Ctrl-C, and then respond `y` when prompted.
System prompt or password prompt	Take over or halt the degraded controller: • Take over the degraded controller from the healthy controller: `storage failover takeover -ofnode` *impaired_node_name* When the degraded controller shows `Waiting for giveback...`, press Ctrl-C, and then respond `y`.

Step 4. If the system is in a dual-chassis HA pair, turn off the power supplies, and then unplug the degraded controller's power cords from the power source.

Opening the controller module

To access components inside the controller, you must first remove the controller module from the system and then remove the cover on the controller module.

About this task

A video for this task is available at:

- YouTube: https://www.youtube.com/playlist?list=PLYV5R7hVcs-CZwRXsocAOmi5RsaXDVZQG

Step 1. If you are not already grounded, properly ground yourself.

Step 2. Loosen the hook and loop strap binding the cables to the cable management device, and then unplug the system cables and SFPs (if needed) from the controller module, keeping track of where the cables were connected. Leave the cables in the cable management device so that when you reinstall the cable management device, the cables are organized.

Step 3. Remove and set aside the cable management devices from the left and right sides of the controller module.

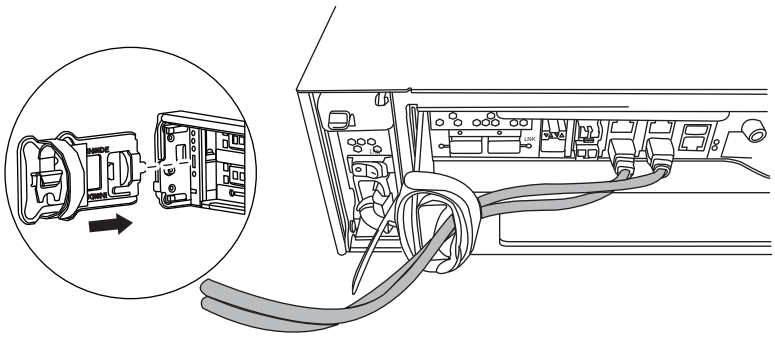

Step 4. Loosen the thumbscrew on the cam handle on the controller module.

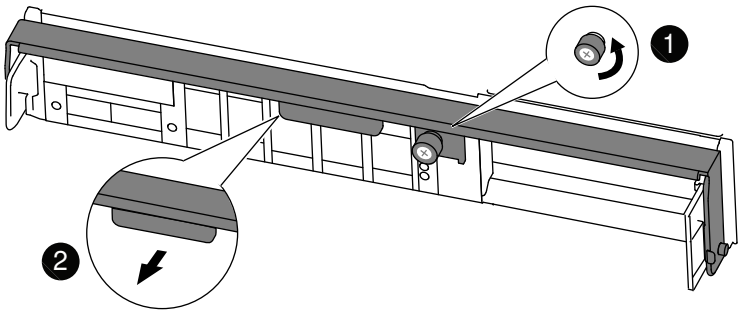

1	Thumbscrew
2	Cam handle

Step 5. Pull the cam handle downward and begin to slide the controller module out of the chassis. Make sure that you support the bottom of the controller module as you slide it out of the chassis.

Replacing the NVMEM battery

To replace the NVMEM battery in your system, you must remove the failed NVMEM battery from the system and replace it with a new NVMEM battery.

About this task

A video for this task is available at:

- YouTube: https://www.youtube.com/playlist?list=PLYV5R7hVcs-CZwRXsocAOmi5RsaXDVZQG

Step 1. If you are not already grounded, properly ground yourself.

Step 2. Open the CPU air duct and locate the NVMEM battery.

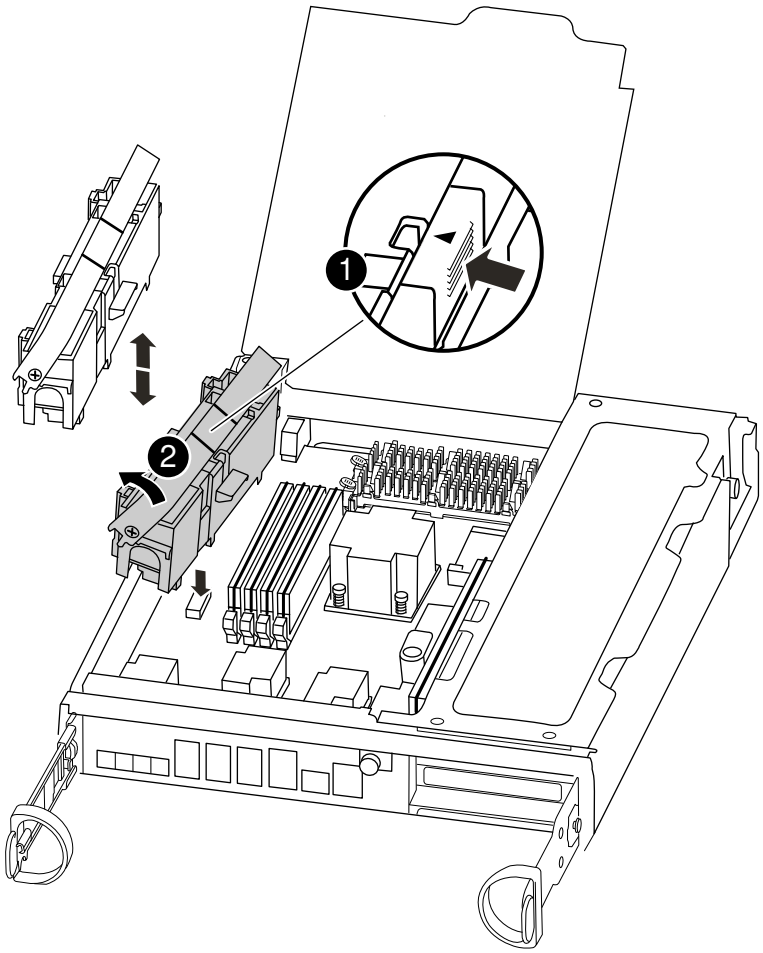

1	Battery lock tab
2	NVMEM battery pack

Step 3. Grasp the battery and press the blue locking tab marked PUSH, and then lift the battery out of the holder and controller module.

Step 4. Remove the replacement battery from its package.

Step 5. Align the tab or tabs on the battery holder with the notches in the controller module side, and then gently push down on the battery housing until the battery housing clicks into place.

Step 6. Close the CPU air duct.Make sure that the plug locks down to the socket.

Reinstalling the controller

After you replace a component within the controller module, you must reinstall the controller module in the system chassis and boot it to a state where you can run diagnostic tests on the replaced component.

About this task

A video for this task is available at:

- YouTube: https://www.youtube.com/playlist?list=PLYV5R7hVcs-CZwRXsocAOmi5RsaXDVZQG

Step 1. If you are not already grounded, properly ground yourself.

Step 2. Align the end of the controller module with the opening in the chassis, and then gently push the controller module halfway into the system.

Note: Do not completely insert the controller module in the chassis until instructed to do so.

Step 3. Recable the system, as needed.If you removed the media converters (SFPs), remember to reinstall them if you are using fiber optic cables.

Step 4. Complete the reinstallation of the controller module: The controller module begins to boot as soon as it is fully seated in the chassis. Be prepared to interrupt the boot process.

a. With the cam handle in the open position, firmly push the controller module in until it meets the midplane and is fully seated, and then close the cam handle to the locked position.

Attention: Do not use excessive force when sliding the controller module into the chassis; you might damage the connectors.

b. Tighten the thumbscrew on the cam handle on back of the controller module.

c. If you have not already done so, reinstall the cable management device.

d. Bind the cables to the cable management device with the hook and loop strap.

e. As each controller starts the booting, press `Ctrl-C` to interrupt the boot process when you see the message `Press Ctrl-C for Boot Menu`.

f. Select the option to boot to Maintenance mode from the displayed menu.

Running system-level diagnostics

After installing a new NVMEM battery, you should run diagnostics.

Before you begin

Your system must be at the LOADER prompt to get to the maintenance menu to start System Level Diagnostics.

All commands in the diagnostic procedures are issued from the controller where the component is being replaced.

Step 1. If the controller to be serviced is not at the LOADER prompt, perform the following steps:

a. Select the option to boot to Maintenance mode by typing: `halt`

b. Once at the LOADER prompt, type `boot_ontap menu`

c. When the system appears at the selection menu, choose option 5 to go into Maintenance mode.

Step 2. Run diagnostics on the caching module: `sldiag device run -dev fcache`

Step 3. Run diagnostics on the NVMEM memory: `sldiag device run -dev nvmem`

Step 4. Verify that no hardware problems resulted from the replacement of the NVMEM battery: `sldiag device status -dev nvmem -long -state failed`
System-level diagnostics returns you to the prompt if there are no test failures, or lists the full status of failures resulting from testing the component.

Step 5. Proceed based on the result of the preceding step:

<table>
<tr><th>If the system-level diagnostics tests...</th><th>Then...</th></tr>
<tr><td>Were completed without any failures</td><td>

Clear the status logs: <code>sldiag device clearstatus</code>
Verify that the log was cleared: <code>sldiag device status</code>

The following default response is displayed:

<code>SLDIAG: No log messages are present.</code>
Exit Maintenance mode: <code>halt</code>

The controller displays the LOADER prompt.
Boot the controller from the LOADER prompt: <code>boot_ontap</code>
Return the controller to normal operation:

<table>
<tr><th>If your controller is in...</th><th>Then...</th></tr>
<tr><td>An HA pair</td><td>Perform a give back: <code>storage failover giveback -ofnode</code> replacement_node_name</td></tr>
</table>

You have completed system-level diagnostics.
</td></tr>
<tr><td>Resulted in some test failures</td><td>
Determine the cause of the problem:

Exit Maintenance mode: <code>halt</code>

After you issue the command, wait until the system stops at the LOADER prompt.
Turn off or leave on the power supplies, depending on how many controller modules are in the chassis:

If you have two controller modules in the chassis, leave the power supplies turned on to provide power to the other controller module.
If you have one controller module in the chassis, turn off the power supplies and unplug them from the power sources.

Verify that you have observed all the considerations identified for running system-level diagnostics, that cables are securely connected, and that hardware components are properly installed in the storage system.
Boot the controller module you are servicing, interrupting the boot by pressing

</td></tr>
</table>

If the system-level diagnostics tests...	Then...
	`Ctrl-C` when prompted to get to the Boot menu: • If you removed the controller in the previous step, fully seat the controller module you are servicing in the chassis. The controller module boots up when fully seated. 5. Select Boot to maintenance mode by typing: `boot_diags` 6. Repeat all of the steps necessary to perform the system level diagnostics for the cache module. 7. Exit Maintenance mode by entering the following command: `halt` After you issue the command, wait until the system stops at the LOADER prompt. 8. Rerun the system-level diagnostic test.

Completing the replacement process

After you replace the part, you can return the failed part to Lenovo, as described in the RMA instructions shipped with the kit. Contact technical support at Lenovo Data Center Support if you need the RMA number or additional help with the replacement procedure.

Swapping out a power supply

Swapping out a power supply involves turning off, disconnecting, and removing the old power supply and installing, connecting, and turning on the replacement power supply.

Before you begin

All other components in the system must be functioning properly; if not, you must contact technical support.

- The power supplies are redundant and hot-swappable.
- This procedure is written for replacing one power supply at a time.
- Power supplies are auto-ranging.

A video for this task is available at:

- YouTube: https://www.youtube.com/playlist?list=PLYV5R7hVcs-CZwRXsocAOmi5RsaXDVZQG

Step 1. Identify the power supply you want to replace, based on console error messages or through the LEDs on the power supplies.

Step 2. If you are not already grounded, properly ground yourself.

Step 3. Turn off the power supply and disconnect the power cables:

a. Turn off the power switch on the power supply.

b. Open the power cord retainer, and then unplug the power cord from the power supply.

c. Unplug the power cord from the power source.

Step 4. Press down the release latch on the power supply cam handle, and then lower the cam handle to the fully open position to release the power supply from the mid plane.

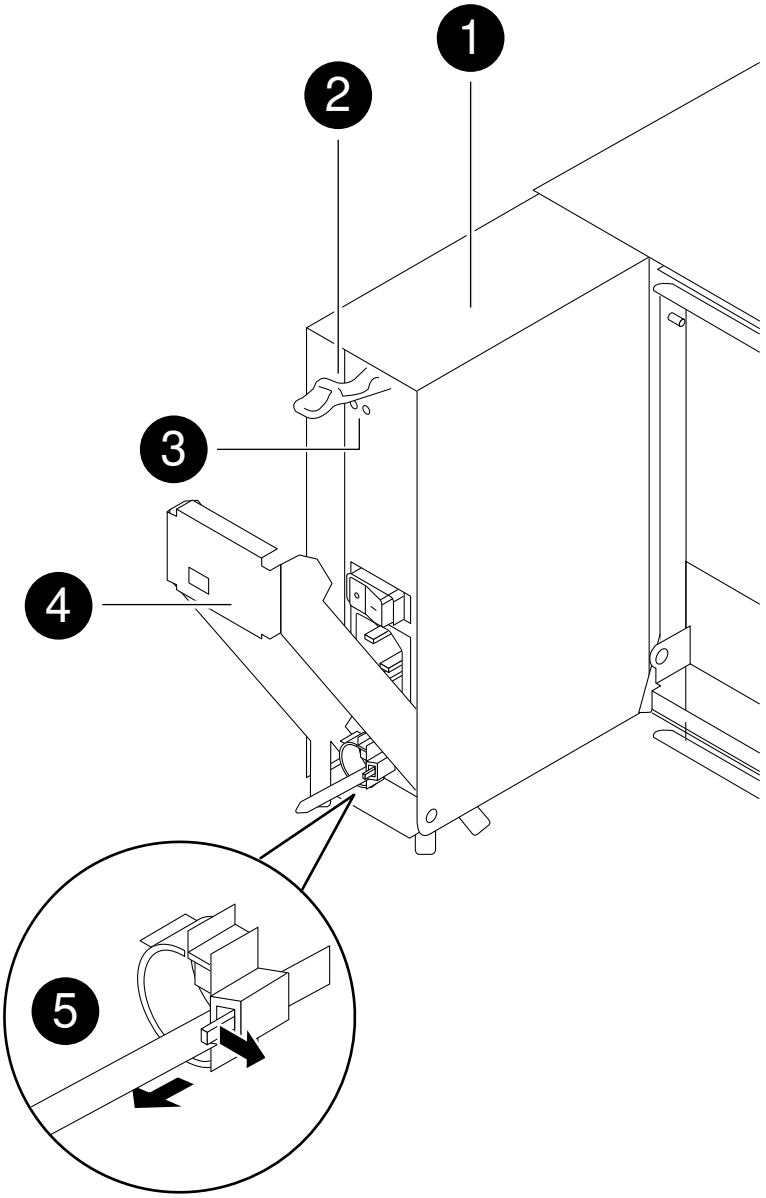

1	Power supply
2	Cam handle release latch
3	Power and Fault LEDs
4	Cam handle
5	Power cord locking mechanism

Step 5. Use the cam handle to slide the power supply out of the system.

CAUTION:

When removing a power supply, always use two hands to support its weight.

Step 6. Make sure that the on/off switch of the new power supply is in the Off position.

Step 7. Using both hands, support and align the edges of the power supply with the opening in the system chassis, and then gently push the power supply into the chassis using the cam handle. The power supplies are keyed and can only be installed one way.

Attention: Do not use excessive force when sliding the power supply into the system; you can damage the connector.

Step 8. Push firmly on the power supply cam handle to seat it all the way into the chassis, and then push the cam handle to the closed position, making sure that the cam handle release latch clicks into its locked position.

Step 9. Reconnect the power supply cabling:

a. Reconnect the power cord to the power supply and the power source.

b. Secure the power cord to the power supply using the power cord retainer.

Step 10. Turn on the power to the new power supply, and then verify the operation of the power supply activity LEDs. The power supply LEDs are lit when the power supply comes online.

The amber fault LED should be off and the DC good light should be on for each power supply.

Completing the replacement process

After you replace the part, you can return the failed part to Lenovo, as described in the RMA instructions shipped with the kit. Contact technical support at Lenovo Data Center Support if you need the RMA number or additional help with the replacement procedure.

Swapping out a fan

To swap out a fan module without interrupting service, you must perform a specific sequence of tasks.

About this task

Attention: You must replace the fan module within two minutes of removing it from the chassis. System airflow is disrupted and the controller module or modules shut down after two minutes to avoid overheating.

A video for this task is available at:

- YouTube: https://www.youtube.com/playlist?list=PLYV5R7hVcs-CZwRXsocAOmi5RsaXDVZQG

Step 1. If you are not already grounded, properly ground yourself.

Step 2. Remove the bezel (if necessary) with two hands, by grasping the openings on each side of the bezel, and then pulling it toward you until the bezel releases from the four ball studs on the chassis frame.

Step 3. Identify the fan module that you must replace by checking the console error messages and looking at the Attention LED on each fan module.

Step 4. Press down the release latch on the fan module cam handle, and then pull the cam handle downward. The fan module moves a little bit away from the chassis.

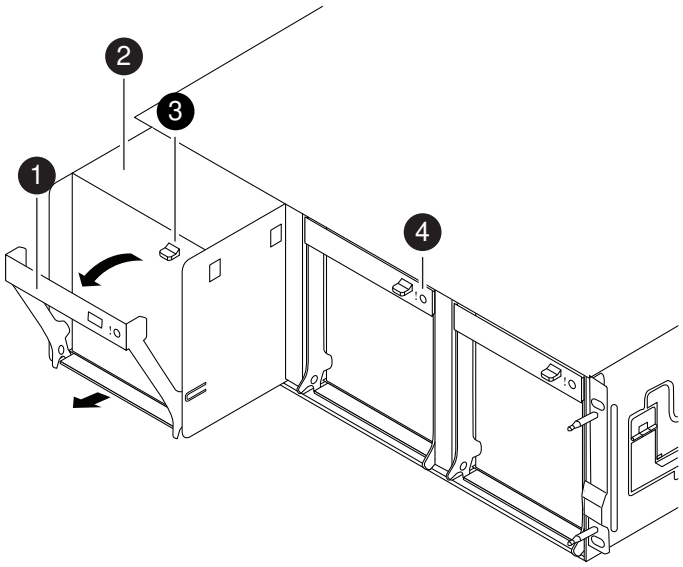

1	Cam handle
2	Fan module
3	Cam handle release latch
4	Fan module Attention LED

Step 5. Pull the fan module straight out from the chassis, making sure that you support it with your free hand so that it does not swing out of the chassis.

CAUTION:
The fan modules are short. Always support the bottom of the fan module with your free hand so that it does not suddenly drop free from the chassis and injure you.

Step 6. Set the fan module aside.

Step 7. Insert the replacement fan module into the chassis by aligning it with the opening, and then sliding it into the chassis.

Step 8. Push firmly on the fan module cam handle so that it is seated all the way into the chassis.
The cam handle raises slightly when the fan module is completely seated.

Step 9. Swing the cam handle up to its closed position, making sure that the cam handle release latch clicks into the locked position.

Step 10. Align the bezel with the ball studs, and then gently push the bezel onto the ball studs.

Completing the replacement process

After you replace the part, you can return the failed part to Lenovo, as described in the RMA instructions shipped with the kit. Contact technical support at Lenovo Data Center Support if you need the RMA number or additional help with the replacement procedure.

Replacing the controller module

You must verify the following prerequisites for the replacement procedure.

Before you begin

- All disk shelves must be working properly.
- The healthy controller must be able to take over the controller that is being replaced (referred to in this procedure as the degraded controller).
- If you are in a MetroCluster configuration, refer to the *MetroCluster Management and Disaster Recovery Guide* to determine if you should use this procedure. ONTAP 9 MetroCluster Management and Disaster Recovery Guide

About this task

- This procedure includes steps for automatically or manually reassigning disks to the *replacement* controller, depending on your system's configuration.You should perform the disk reassignment as directed in the procedure.
- You must replace the failed component with a replacement FRU component you received from your provider.
- You must be replacing a controller module with a controller module of the same model type; you cannot upgrade your system by just replacing the controller module.
- You cannot change any disks or disk shelves as part of this procedure.
- In this procedure, the boot device is moved from the degraded controller to the replacement controller so that the replacement controller will boot up in the same version of ONTAP as the old controller.
- Any PCIe cards moved from the old controller module to the new controller module or added from existing customer site inventory must be supported by the replacement controller module. Lenovo Press
- It is important that you apply the commands in these steps on the correct systems:
  - The *degraded* controller is the controller that is being replaced.
  - The *replacement* controller is the new controller that is replacing the degraded controller.
  - The *healthy* controller is the surviving controller.
- You must always capture the controller's console output to a text file. This provides you a record of the procedure so that you can troubleshoot any issues that you might encounter during the replacement process.

Preparing the system for the replacement

You must gather information and shut down the degraded controller by taking it over if it is in an HA pair.

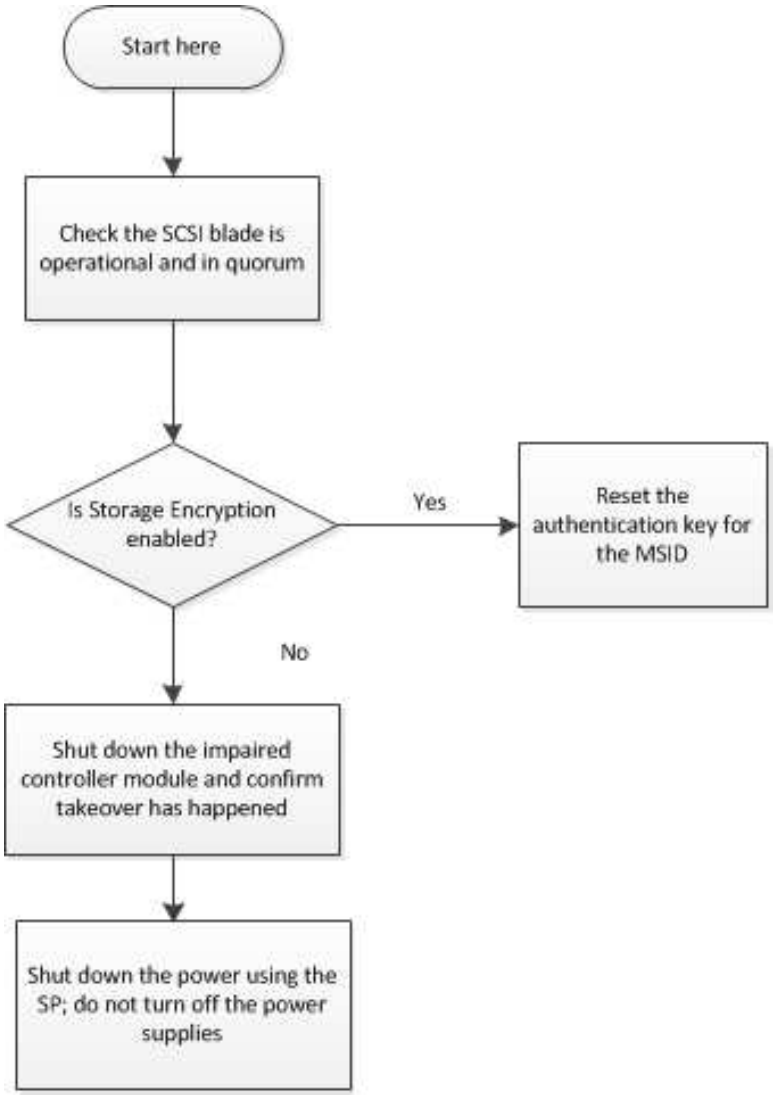

Checking quorum on the SCSI blade

If you are operating in a SAN environment and you are replacing a controller module, you must verify that each controller is in a SAN quorum with other controllers in the cluster.

Step 1. With the privilege level set to advanced, check that the most recent `scsiblade` event message for the degraded controller indicates that the scsi-blade is in quorum: `event log show -node` *impaired-node-name* `-messagename scsiblade.*`

You should see messages similar to the following, indicating that the SCSI-blade process is in quorum with the other controllers in the cluster:

```
Time Node Severity Event
------------------- ---------------- ------------- --------------------------
9/1/2016 14:03:51 node1 INFORMATIONAL scsiblade.in.quorum: The scsi-blade on this node
established quorum with the other nodes in the cluster.
9/1/2016 14:03:51 node2 INFORMATIONAL scsiblade.in.quorum: The scsi-blade on this node
established quorum with the other nodes in the cluster.
9/1/2016 14:03:48 node3 INFORMATIONAL scsiblade.in.quorum: The scsi-blade on this node
established quorum with the other nodes in the cluster.
9/1/2016 14:03:43 node4 INFORMATIONAL scsiblade.in.quorum: The scsi-blade on this node
established quorum with the other nodes in the cluster.
```

If you do not see these quorum messages, check the health of the SAN processes and resolve any issues before proceeding with the replacement.

Pre-replacement tasks for systems that use Storage Encryption

If you are replacing a controller module in a system with Storage Encryption enabled, you must first reset the authentication keys of the disks to their MSID (the default security ID set by the manufacturer). This is a temporary necessity to avoid losing access to the data.

After resetting the authentication keys to the MSID, the data on the disks is no longer protected by secret authentication keys. You must ensure the physical safety of the disks during the replacement or upgrade process.

Step 1. Set the privilege level to advanced: `set -privilege advanced`

Step 2. Reset the MSID using the instructions in the "Returning SEDs to unprotected mode" section.

ONTAP 9 Encryption Power Guide

Step 3. Exit advanced mode:`set -privilege admin`

Shutting down the degraded controller

You can shut down or take over the degraded controller using different procedures, depending on the storage system hardware configuration.

Shutting down the controller

To shut down the degraded controller, you must determine the status of the controller and, if necessary, take over the controller so that the healthy controller continues to serve data for the degraded controller's storage.

Before you begin

- If you have a cluster with more than two controllers, check the health and Epsilon from advanced mode: `cluster show -epsilon*`
- If the cluster is not in quorum or a controller that is not the degraded controller shows `false` for eligibility and health, correct the issue before proceeding to the next step.

Step 1. If Epsilon resides in the degraded controller:

a. Remove Epsilon from the degraded controller: `cluster modify -node` *impaired_node* `-epsilon false`

b. Assign Epsilon to a healthy controller in the cluster: `cluster modify -node` *healthy_node* `-epsilon true`

Step 2. Disable automatic giveback from the console of the healthy controller using the following command: `storage failover modify -node local -auto-giveback false`

Step 3. Take the degraded controller to the LOADER prompt by typing: `storage failover takeover <degraded controller name>` from the RJ45 Management Port of the degraded controller.

If the degraded controller is displaying...	Then...
The LOADER prompt	Go to the next step.
`Waiting for giveback...`	Press Ctrl-C, and then respond `y` when prompted.
System prompt or password prompt	Take over or halt the degraded controller: • Take over the degraded controller from the healthy controller: `storage failover takeover -ofnode` *impaired_node_name* When the degraded controller shows `Waiting for giveback...`, press Ctrl-C, and then respond `y`.

Step 4. If the system is in a dual-chassis HA pair, turn off the power supplies, and then unplug the degraded controller's power cords from the power source.

Replacing the controller module hardware

To replace the controller module hardware, you must remove the degraded controller, move FRU components to the replacement controller module, install the replacement controller module in the chassis, and then boot the system to Maintenance mode.

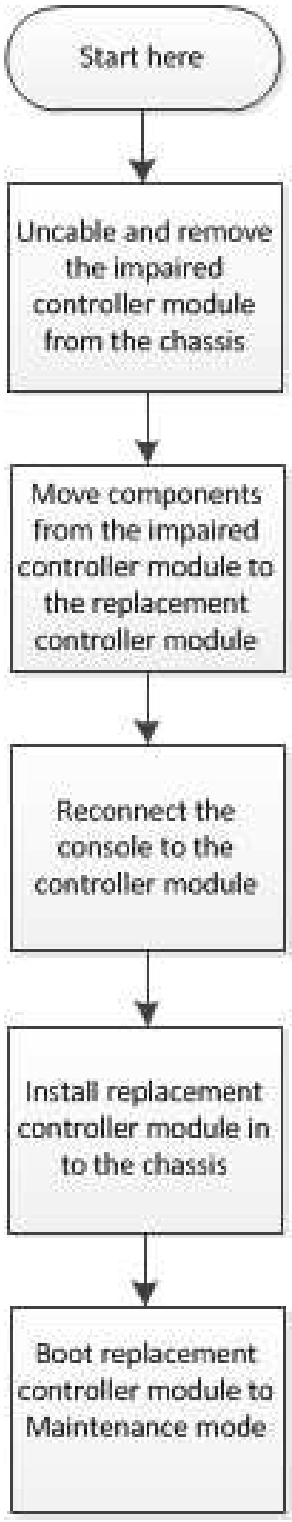

Opening the controller module

To replace the controller module, you must first remove the old controller module from the chassis.

About this task

A video for this task is available at:

- YouTube: https://www.youtube.com/playlist?list=PLYV5R7hVcs-CZwRXsocAOmi5RsaXDVZQG

Step 1. If you are not already grounded, properly ground yourself.

Step 2. Loosen the hook and loop strap binding the cables to the cable management device, and then unplug the system cables and SFPs (if needed) from the controller module, keeping track of where the cables were connected. Leave the cables in the cable management device so that when you reinstall the cable management device, the cables are organized.

Step 3. Remove and set aside the cable management devices from the left and right sides of the controller module.

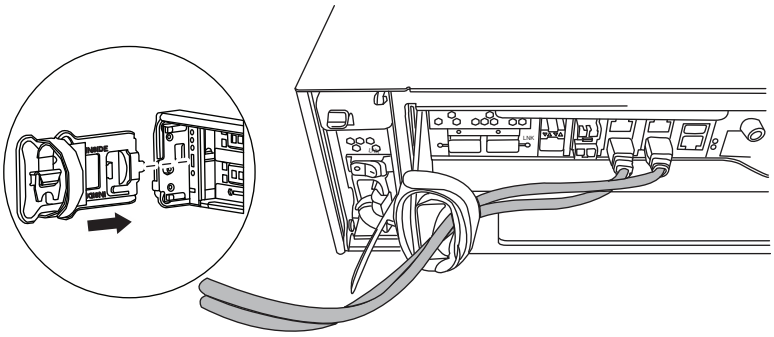

Step 4. If you left the SFP modules in the system after removing the cables, move them to the new controller module.

Step 5. Loosen the thumbscrew on the cam handle on the controller module.

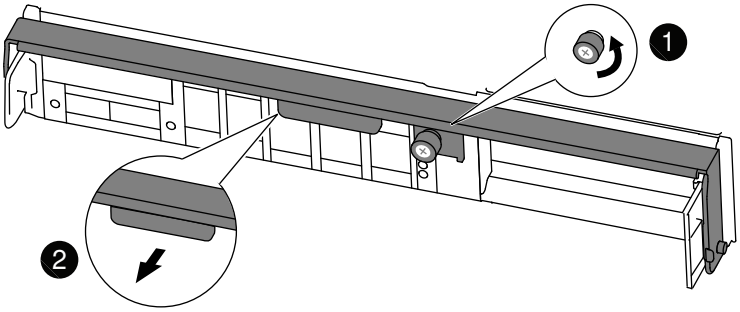

1	Thumbscrew
2	Cam handle

Step 6. Pull the cam handle downward and begin to slide the controller module out of the chassis. Make sure that you support the bottom of the controller module as you slide it out of the chassis.

Moving a caching module

To move a caching module referred to as the M.2 PCIe card on the label on your controller, locate and move it from the old controller into the replacement controller and follow the specific sequence of steps.

Before you begin

You must have the new controller module ready so that you can move the caching module directly from the old controller module to the corresponding slot in the new one. All other components in the storage system must be functioning properly; if not, you must contact technical support.

About this task

A video for this task is available at:

- YouTube: https://www.youtube.com/playlist?list=PLYV5R7hVcs-CZwRXsocAOmi5RsaXDVZQG

Step 1. Locate the caching module at the rear of the controller module and remove it.

a. Press the release tab.

b. Remove the heatsink. The storage system comes with two slots available for the caching module and only one slot is occupied, by default.

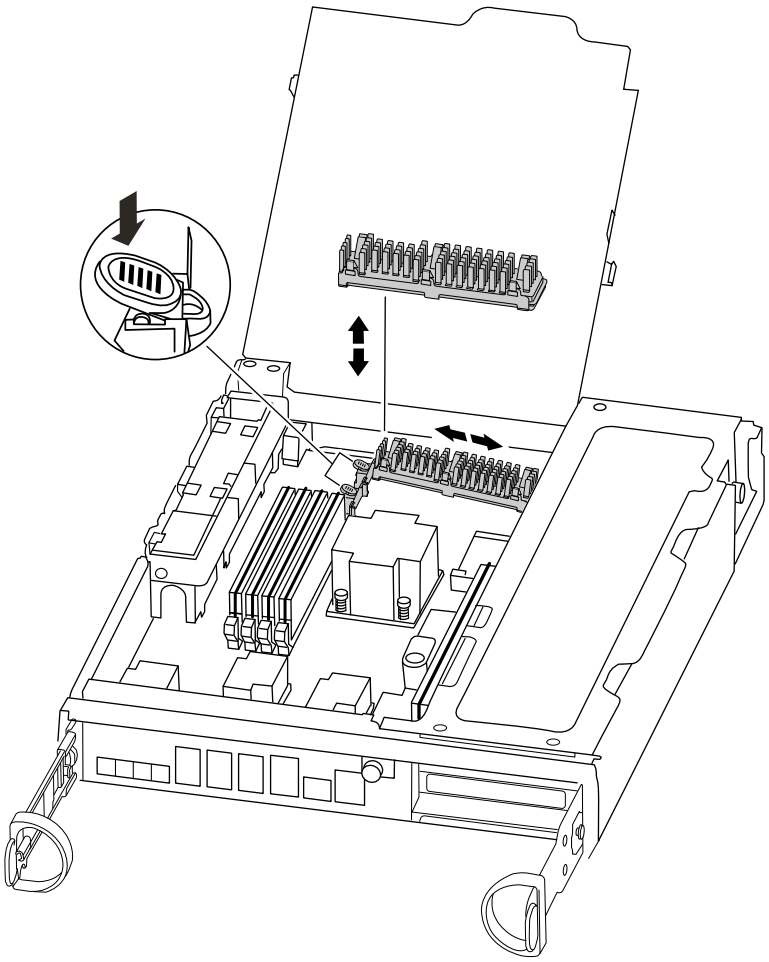

Step 2. If you are adding a caching module, go to the next step; if you are replacing the caching module, gently pull it straight out of the housing.

Step 3. Move the caching module to the new controller module, and then align the edges of the caching module with the socket housing and gently push it into the socket.

Step 4. Verify that the caching module is seated squarely and completely in the socket. If necessary, remove the caching module and reseat it into the socket.

Step 5. Reseat and push the heatsink down to engage the locking button on the caching module housing.

Step 6. Repeat the steps if you have a second caching module. Close the controller module cover, as needed.

Moving the boot device

You must locate the boot media and follow the directions to remove it from the old controller and insert it in the new controller.

About this task

A video for this task is available at:

- YouTube: https://www.youtube.com/playlist?list=PLYV5R7hVcs-CZwRXsocAOmi5RsaXDVZQG

Step 1. Locate the boot media using the following illustration or the FRU map on the controller module:

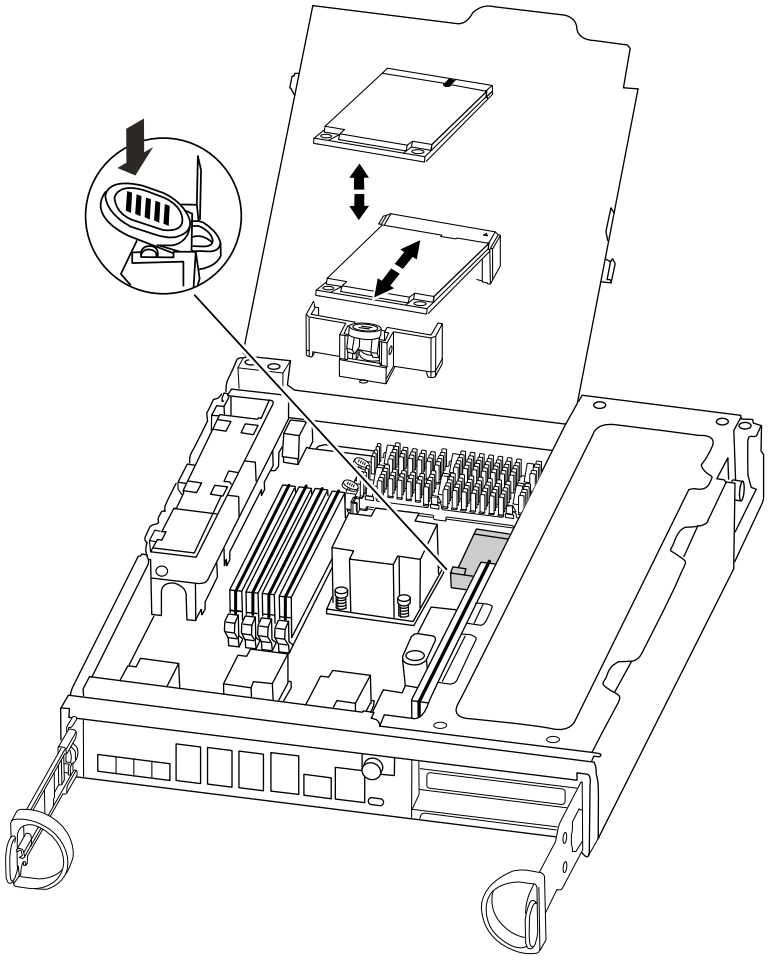

Step 2. Press the blue button on the boot media housing to release the boot media from its housing, and then gently pull it straight out of the boot media socket.

Note: Do not twist or pull the boot media straight up, because this could damage the socket or the boot media.

Step 3. Move the boot media to the new controller module, align the edges of the boot media with the socket housing, and then gently push it into the socket.

Step 4. Check the boot media to make sure that it is seated squarely and completely in the socket. If necessary, remove the boot media and reseat it into the socket.

Step 5. Push the boot media down to engage the locking button on the boot media housing.

Moving the NVMEM battery

To move the NVMEM battery from the old controller module to the new controller module, you must perform a specific sequence of steps.

About this task

A video for this task is available at:

- YouTube: https://www.youtube.com/playlist?list=PLYV5R7hVcs-CZwRXsocAOmi5RsaXDVZQG

Step 1. Open the CPU air duct and locate the NVMEM battery.

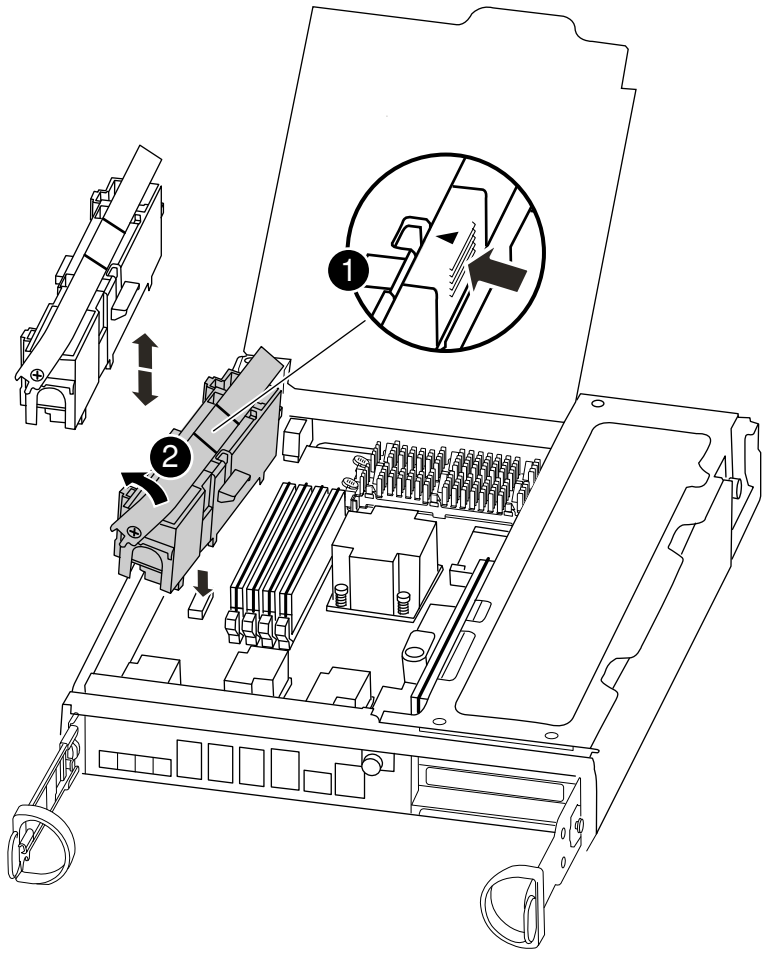

1	Battery lock tab
2	NVMEM battery pack

Step 2. Grasp the battery and press the blue locking tab marked PUSH, and then lift the battery out of the holder and controller module.

Step 3. Move the NVMEM battery to the replacement controller module.

Step 4. Align the tab or tabs on the battery holder with the notches in the controller module side, and then gently push down on the battery housing until the battery housing clicks into place.

Moving the DIMMs

To move the DIMMs, locate and move them from the old controller into the replacement controller and follow the specific sequence of steps.

About this task

A video for this task is available at:

- YouTube: https://www.youtube.com/playlist?list=PLYV5R7hVcs-CZwRXsocAOmi5RsaXDVZQG

Step 1. Locate the DIMMs on your controller.

Note: Each system memory DIMM has an LED located on the board next to each DIMM slot. Verify that each DIMM is operating properly using the LED states.

Step 2. Note the orientation of the DIMM in the socket so that you can insert the DIMM in the replacement controller module in the proper orientation.

Step 3. Slowly push apart on the two DIMM ejector tabs, on either side of the DIMM to eject the DIMM from its slot, and then slide it out of the slot.

Attention: Carefully hold the DIMM by the edges to avoid pressure on the components on the DIMM circuit board.

The following illustration shows the location of system DIMMs:

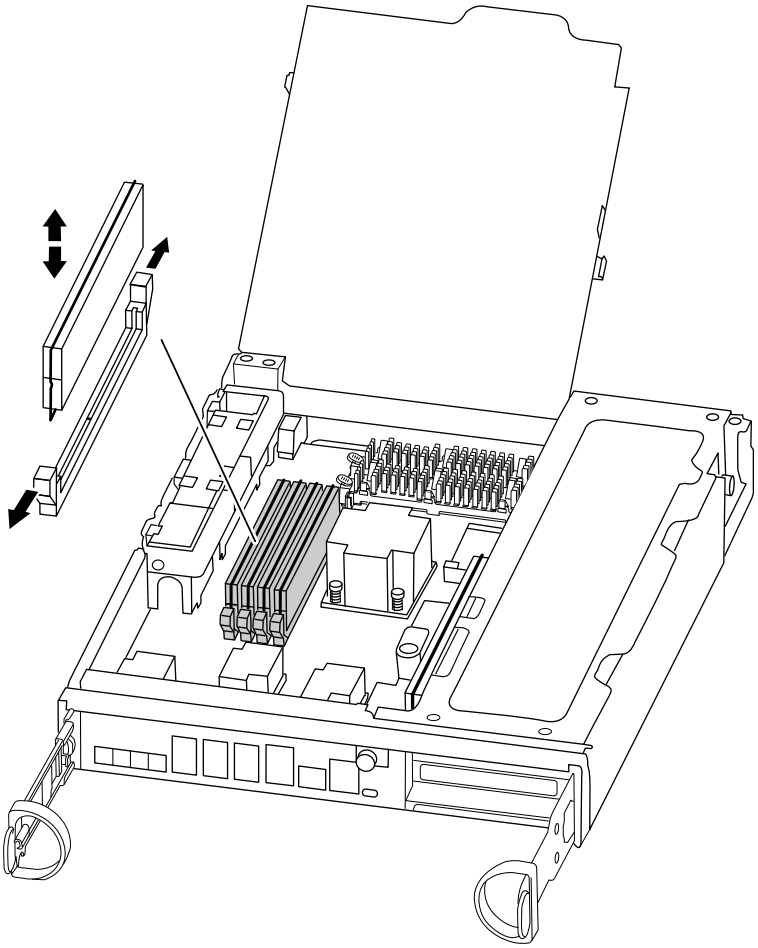

Step 4. Repeat these steps to remove additional DIMMs as needed.

Step 5. Verify that the NVMEM battery is not plugged into the new controller module.

Step 6. Locate the slot where you are installing the DIMM.

Step 7. Make sure that the DIMM latches on the connector are in the open position, and then insert the DIMM squarely into the slot.The DIMM fits tightly in the slot, but should go in easily. If not, realign the DIMM with the slot and reinsert it.

Attention: Visually inspect the DIMM to verify that it is evenly aligned and fully inserted into the slot.

Step 8. Repeat these steps for the remaining DIMMs.

Moving a PCIe card

To move PCIe cards, locate and move them from the old controller into the replacement controller and follow the specific sequence of steps.

Before you begin

You must have the new controller module ready so that you can move the PCIe directly from the old controller module to the corresponding slots in the new one.

About this task

A video for this task is available at:

- YouTube: https://www.youtube.com/playlist?list=PLYV5R7hVcs-CZwRXsocAOmi5RsaXDVZQG

Step 1. Loosen the thumbscrew on the controller module side panel.

Step 2. Swing the side panel off the controller module.

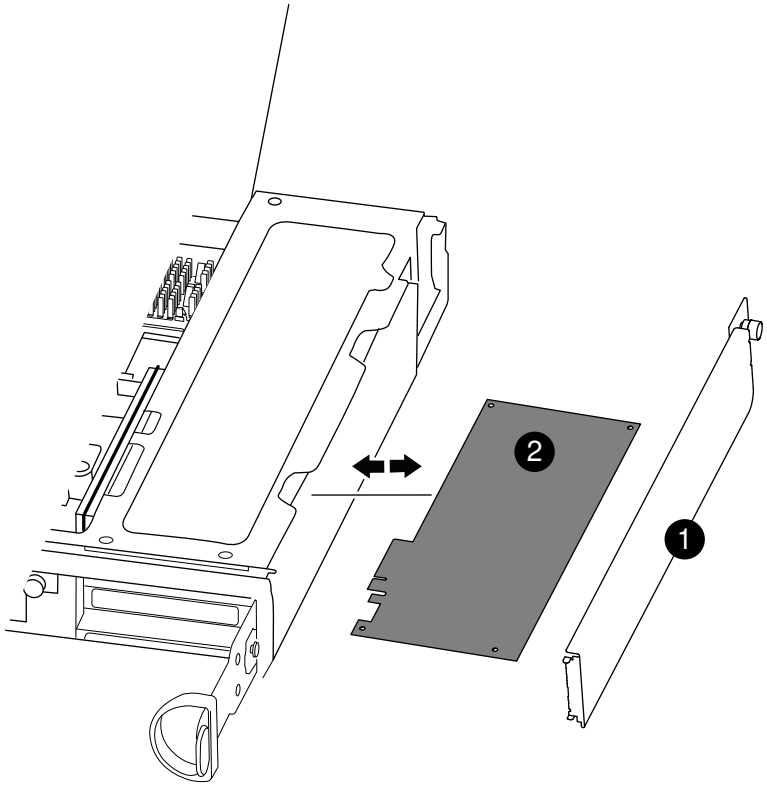

1	Side panel
2	PCIe card

Step 3. Remove the PCIe card from the old controller module and set it aside. Make sure that you keep track of which slot the PCIe card was in.

Step 4. Repeat the preceding step for the remaining PCIe cards in the old controller module.

Step 5. Open the new controller module side panel, if necessary, slide off the PCIe card filler plate, as needed, and carefully install the PCIe card. Be sure that you properly align the card in the slot and exert even pressure on the card when seating it in the socket. The card must be fully and evenly seated in the slot.

Step 6. Repeat the preceding step for the remaining PCIe cards that you set aside.

Step 7. Close the side panel and tighten the thumbscrew.

Installing the controller

After you install the components from the old controller module into the new controller module, you must install the new controller module into the system chassis and boot the operating system.

For HA pairs with two controller modules in the same chassis, the sequence in which you install the controller module is especially important because it attempts to reboot as soon as you completely seat it in the chassis.

Note: The system might update system firmware when it boots. Do not abort this process.

A video for this task is available at:

- YouTube: https://www.youtube.com/playlist?list=PLYV5R7hVcs-CZwRXsocAOmi5RsaXDVZQG

Step 1. If you are not already grounded, properly ground yourself.

Step 2. If you have not already done so, close the CPU air duct.

Step 3. If you have not already done so, make sure the NVMEM battery is plugged into the controller.

Step 4. Align the end of the controller module with the opening in the chassis, and then gently push the controller module halfway into the system.

Note: Do not completely insert the controller module in the chassis until instructed to do so.

Step 5. Cable the management and console ports so that you can access the system to perform the tasks in the following sections.

Step 6. Complete the reinstallation of the controller module:

If your system is in...	Then perform these steps...
An HA pair	The controller module begins to boot as soon as it is fully seated in the chassis. Be prepared to interrupt the boot process. 1. With the cam handle in the open position, firmly push the controller module in until it meets the midplane and is fully seated, and then close the cam handle to the locked position. Tighten the thumbscrew on the cam handle on back of the controller module. **Attention:** Do not use excessive force when sliding the controller module into the chassis; you might damage the connectors. The controller begins to boot as soon as it is seated in the chassis. 2. If you have not already done so, reinstall the cable management device. 3. Bind the cables to the cable management device with the hook and loop strap. 4. When you see `Press Ctrl-C for Boot Menu`, press `Ctrl-C` to interrupt the boot process. 5. Select the option to boot to Maintenance mode from the displayed menu.

Restoring and verifying the system configuration

After completing the hardware replacement and booting to Maintenance mode, you verify the low-level system configuration of the replacement controller and reconfigure system settings as necessary.

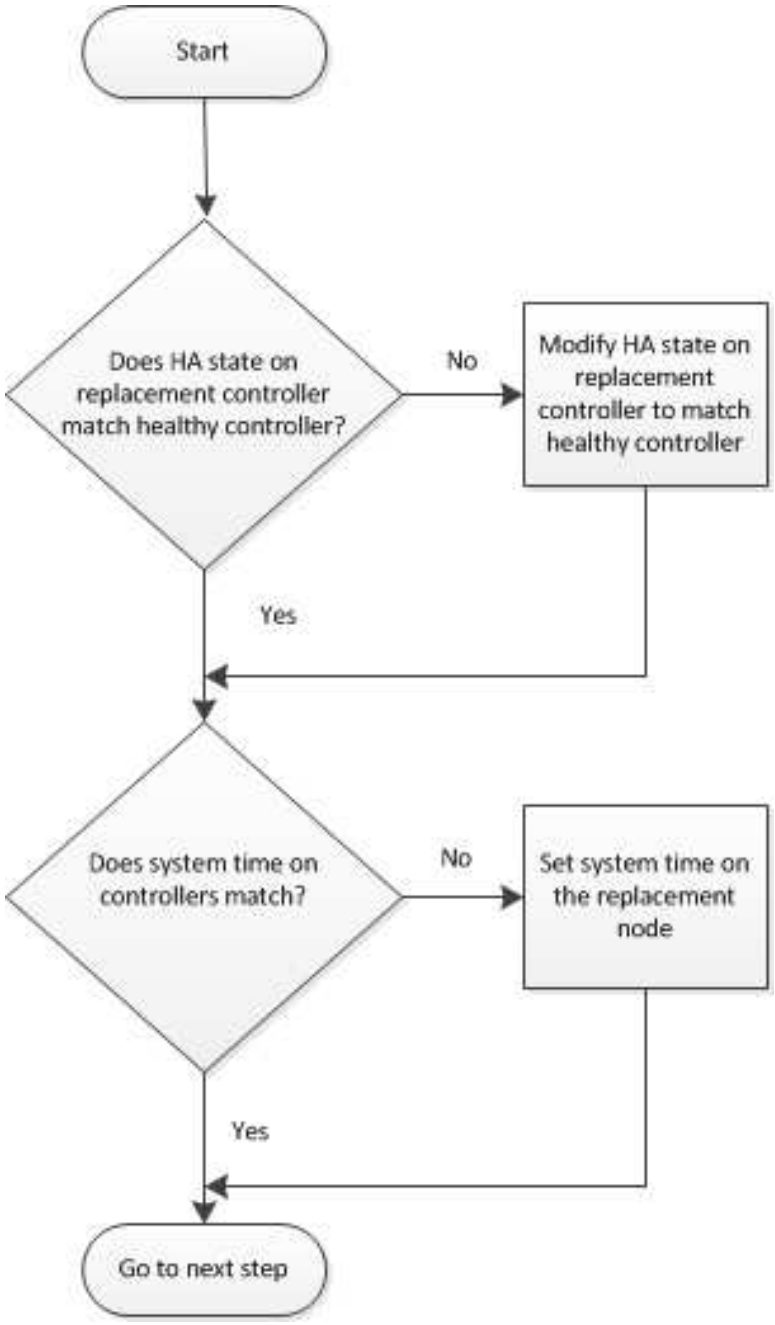

Verifying and setting the HA state of the controller module

You must verify the HA state of the controller module and, if necessary, update the state to match your system configuration.

Step 1. In Maintenance mode from the new controller module, verify that all components display the same HA state: `ha-config show`

If your system is in...	The HA state for all components should be...
An HA pair	`ha`
A MetroCluster configuration with four or more controllers	`mcc`

Step 2. If the displayed system state of the controller module does not match your system configuration, set the HA state for the controller module: `ha-config modify controller` *ha-state*

Step 3. If the displayed system state of the chassis does not match your system configuration, set the HA state for the chassis: `ha-config modify chassis` *ha-state*

Running system-level diagnostics

You should run comprehensive or focused diagnostic tests for specific components and subsystems whenever you replace the controller.

All commands in the diagnostic procedures are issued from the controller where the component is being replaced.

Step 1. If the controller to be serviced is not at the LOADER prompt, reboot the controller: `halt`

After you issue the command, you should wait until the system stops at the LOADER prompt.

Step 2. Run diagnostics on the caching module: `sldiag device run -dev fcache`

Step 3. Display and note the available devices on the controller module: `sldiag device show -dev mb` The controller module devices and ports displayed can be any one or more of the following:

- bootmedia is the system booting device.
- cna is a Converged Network Adapter or interface not connected to a network or storage device.
- fcal is a Fibre Channel-Arbitrated Loop device not connected to a Fibre Channel network.
- env is motherboard environmentals.
- mem is system memory.
- nic is a network interface card.
- nvram is nonvolatile RAM.
- nvmem is a hybrid of NVRAM and system memory.
- sas is a Serial Attached SCSI device not connected to a disk shelf.

Step 4. Run diagnostics for each component from the maintenance menu. For example: `sldiag device status -dev nvmem -long -state failed`

If you want to run diagnostic tests on...	Then...
Individual components	1. Clear the status logs: `sldiag device clearstatus` 2. Display the available tests for the selected devices: `sldiag device show -dev` *dev_name* *dev_name* can be any one of the ports and devices identified in the preceding step. 3. Examine the output and, if applicable, select only the tests that you want to run: `sldiag device modify -dev` *dev_name* `-selection only` -selection only disables all other tests that you do not want to run for the device. 4. Run the selected tests: `sldiag device run -dev` *dev_name* After the test is complete, the following message is displayed: `*> <SLDIAG:_ALL_TESTS_COMPLETED>` 5. Verify that no tests failed: `sldiag device status -dev` *dev_name* `-long -state failed` System-level diagnostics returns you to the prompt if there are no test failures, or lists the full status of failures resulting from testing the component.
Multiple components at the same time	1. Review the enabled and disabled devices in the output from the preceding procedure and determine which ones you want to run concurrently. 2. List the individual tests for the device: `sldiag device show -dev` *dev_name* 3. Examine the output and, if applicable, select only the tests that you want to run: `sldiag device modify -dev` *dev_name* `-selection only` -selection only disables all other tests that you do not want to run for the device. 4. Verify that the tests were modified: `sldiag device show` 5. Repeat these substeps for each device that you want to run concurrently. 6. Run diagnostics on all of the devices: `sldiag device run` **Attention:** Do not add to or modify your entries after you start running diagnostics. After the test is complete, the following message is displayed: `*> <SLDIAG:_ALL_TESTS_COMPLETED>`

If you want to run diagnostic tests on...	Then...
	7. Verify that there are no hardware problems on the controller: `sldiag device status -long -state failed` System-level diagnostics returns you to the prompt if there are no test failures, or lists the full status of failures resulting from testing the component.

Step 5. Proceed based on the result of the preceding step.

If the system-level diagnostics tests...	Then...
Were completed without any failures	1. Clear the status logs: `sldiag device clearstatus` 2. Verify that the log was cleared: `sldiag device status` The following default response is displayed: `SLDIAG: No log messages are present.` 3. Exit Maintenance mode by typing: `halt` The system displays the LOADER prompt. 4. Type `boot_ontap` to return the controller to normal operation.
Resulted in some test failures	Determine the cause of the problem. 1. Exit Maintenance mode: `halt` 2. Perform a clean shutdown, and then disconnect the power supplies. 3. Verify that you have observed all of the considerations identified for running system-level diagnostics, that cables are securely connected, and that hardware components are properly installed in the storage system. 4. Reconnect the power supplies, and then power on the storage system. 5. Rerun the system-level diagnostics test.

Completing system restoration

To complete the replacement procedure and restore your system to full operation, you must recable the storage, confirm disk reassignment, restore the Lenovo Storage Encryption configuration (if necessary), and install licenses for the new controller.

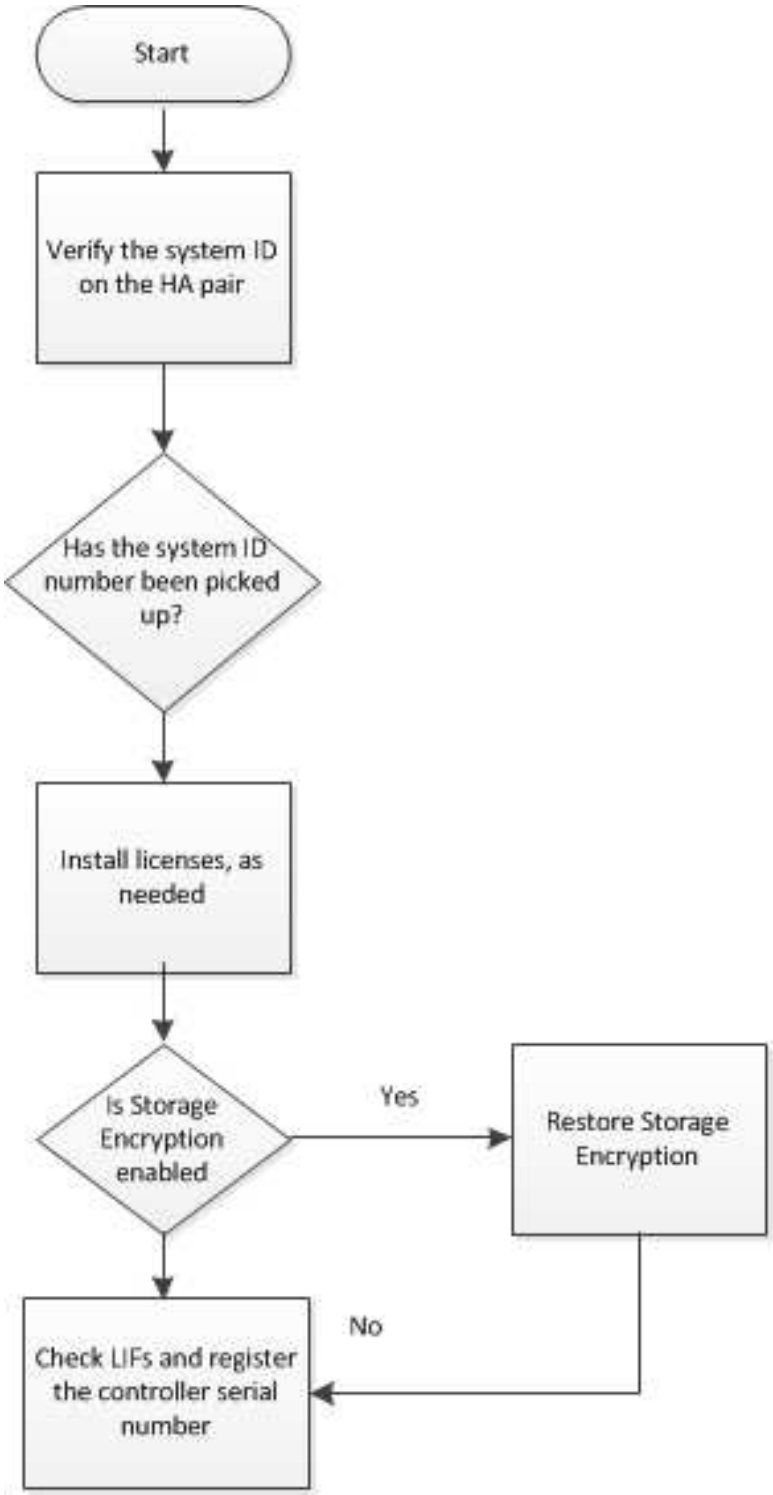

Recabling the system

After running diagnostics, you must recable the controller module's storage and network connections.

Step 1. Recable the system.

If you removed the media converters (SFPs), remember to reinstall them if you are using fiber optic cables.

Reassigning disks

If the storage system is in an HA pair, the system ID of the new controller module is automatically assigned to the disks when the giveback occurs at the end of the procedure.

You must use the correct procedure for your configuration:

Controller redundancy	Then use this procedure...
HA pair	"Verifying the system ID change on an HA system" on page 51

Verifying the system ID change on an HA system

You must confirm the system ID change when you boot the replacement controller and then verify that the change was implemented.

This procedure applies only to systems running ONTAP in an HA pair.

Step 1. If the replacement controller is in Maintenance mode (showing the *> prompt, exit Maintenance mode and go to the LOADER prompt: `halt`

Step 2. From the LOADER prompt on the replacement controller, boot the controller, entering `y` if you are prompted to override the system ID due to a system ID mismatch:`boot_ontap`

Step 3. Wait until the `Waiting for giveback...` message is displayed on the replacement controller console and then, from the healthy controller, verify that the new partner system ID has been automatically assigned.

Example

```
node1> storage failover show
                                    Takeover
Node              Partner           Possible     State Description
------------      ------------      --------     -----------------------------------
node1             node2             false        System ID changed on partner (Old:
                                                   151759755, New: 151759706), In takeover
node2             node1             -            Waiting for giveback (HA mailboxes)
```

Step 4. From the healthy controller, verify that any coredumps are saved:

a. Change to the advanced privilege level: `set -privilege advanced`

You can respond `Y` when prompted to continue into advanced mode. The advanced mode prompt appears (*>).

b. Save any coredumps: `system node run -node` *local-node-name* `partner savecore`

c. Wait for savecore command to complete before issuing the giveback.You can enter the following command to monitor the progress of the savecore command: `system node run -node` *local-node-name* `partner savecore -s`

d. Return to the admin privilege level: `set -privilege admin`

Step 5. Give back the controller:

a. From the healthy controller, give back the replaced controller's storage: `storage failover giveback -ofnode` *replacement_node_name*
The replacement controller takes back its storage and completes booting.

If you are prompted to override the system ID due to a system ID mismatch, you should enter `y`.

Note: If the giveback is vetoed, you can consider overriding the vetoes.

If giveback is vetoed

b. After the giveback has been completed, confirm that the HA pair is healthy and that takeover is possible: `storage failover show`

   The output from the `storage failover show` command should not include the `System ID changed on partner` message.

Step 6. If the system is in a MetroCluster configuration, monitor the status of the controller: `metrocluster node show`

The MetroCluster configuration takes a few minutes after the replacement to return to a normal state. The `metrocluster node show -fields node-systemid` command output displays the old system ID until the MetroCluster configuration returns to a normal state.

Step 7. Verify that the disks or Flex Array LUNS were assigned correctly: `storage disk show -ownership`

Example

The disks belonging to the replacement controller should show the new system ID. In the following example, the disks owned by node1 now show the new system ID, 1873775277:

```
node1> storage disk show -ownership

Disk  Aggregate Home  Owner  DR Home  Home ID    Owner ID  DR Home ID Reserver  Pool
----- ------    ----- ------ -------- -------    -------    -------  ---------  ---
1.0.0  aggr0_1  node1 node1  -        1873775277 1873775277  -       1873775277 Pool0
1.0.1  aggr0_1  node1 node1           1873775277 1873775277  -       1873775277 Pool0
.
.
.
```

Step 8. If the controller is in a MetroCluster configuration, depending on the MetroCluster state, verify that the DR home ID field shows the original owner of the disk if the original owner is a controller on the disaster site. This is required if both of the following are true:

- The MetroCluster configuration is in a switchover state.
- The replacement controller is the current owner of the disks on the disaster site.

Recover from a disaster

Step 9. If your system is in a MetroCluster configuration, verify that each controller is configured: `metrocluster node show - fields configuration-state`

Recover from a disaster

Example

```
node1_siteA::> metrocluster node show -fields configuration-state

dr-group-id            cluster node           configuration-state
-----------             --------------------- -------------- -------------------
1 node1_siteA          node1mcc-001           configured
1 node1_siteA          node1mcc-002           configured
1 node1_siteB          node1mcc-003           configured
1 node1_siteB          node1mcc-004           configured

4 entries were displayed.
```

Step 10. Verify that the expected volumes are present for each controller: `vol show -node` *node-name*

Step 11. If you disabled automatic takeover on reboot, enable it from the healthy controller: `storage failover modify -node` *replacement-node-name* `-onreboot true`

Installing licenses for the replacement controller in ONTAP

You must install new licenses for the replacement controller if the degraded controller was using ONTAP features that require a standard (controller-locked) license. For features with standard licenses, each controller in the cluster should have its own key for the feature.

Until you install license keys, features requiring standard licenses continue to be available to the replacement controller. However, if the degraded controller was the only controller in the cluster with a license for the feature, no configuration changes to the feature are allowed. Also, using unlicensed features on the controller might put you out of compliance with your license agreement, so you should install the replacement license key or keys on the replacement controller as soon as possible.

The licenses keys must be in the 28-character format.

You have a 90-day grace period in which to install the license keys. After the grace period, all old licenses are invalidated. After a valid license key is installed, you have 24 hours to install all of the keys before the grace period ends.

Note: The new license keys that you require are automatically generated and sent to the email address on file. If you did not receive the email with the license keys within 30 days, contact technical support.

Step 1. If you need to retrieve the license keys, obtain the replacement license keys on Lenovo Features on Demand. For details, refer to DM Series Premium Feature Key Procedure.

Step 2. Install each license key: `system license add -license-code` *license-key*, *license-key*...

Step 3. Remove the old licenses, if desired:

a. Check for unused licenses: `license clean-up -unused -simulate`

b. If the list looks correct, remove the unused licenses: `license clean-up -unused`

Restoring Storage Encryption functionality

After replacing the controller module or NVRAM module for a storage system that you previously configured to use Storage Encryption, you must perform additional steps to ensure uninterrupted Storage Encryption functionality. You can skip this task on storage systems that do not have Storage Encryption enabled.
alexb

Step 1. Restore Storage Encryption functionality by running the `key_manager` setup wizard and to set the FIPS and/or data authentication keys on the disks. ONTAP 9 Encryption Power Guide

Verifying LIFs

Before returning the replacement controller to service, you should verify that the LIFs are on their home ports and reset automatic giveback.

Step 1. Verify that the logical interfaces are reporting to their home controller and ports: `network interface show -is-home false`

If any LIFs are listed as false , revert them to their home ports: `network interface revert *`

Step 2. If automatic giveback was disabled, reenable it: `storage failover modify -node local -auto-giveback true`

Setting and verifying system time after replacing the controller

You should check the time and date on the replacement controller module against the healthy controller module in an HA pair. If the time and date do not match, you must reset them on the replacement controller module to prevent possible outages on clients due to time differences.

It is important that you apply the commands in the steps on the correct systems:

- The *replacement controller* is the new controller that replaced the degraded controller as part of this procedure.
- The *healthy controller* is the HA partner of the replacement controller

Step 1. In *admin* privilege on the replacement controller, check the system time on the controllers: `cluster date show`
The date and time are displayed for all controllers in the cluster.

Step 2. If necessary, set the time on the replacement controller to match the healthy controller: `cluster date modify -dateandtime "`*target_date_and_time*`"`

Step 3. Check the date and time from the replacement controller: `cluster date show`

Step 4. Exit *admin* privilege.

Completing the replacement process

After you replace the part, you can return the failed part to Lenovo, as described in the RMA instructions shipped with the kit. Contact technical support at Lenovo Data Center Support if you need the RMA number or additional help with the replacement procedure.

Important information after replacing the controller module

Important: Please contact your Lenovo support personnel to obtain replacement licenses for your new controller.

Replacing a PCIe card

To replace a PCIe card, you must perform a specific sequence of tasks.

- You can use this procedure with all versions of ONTAP supported by your system
- All other components in the system must be functioning properly; if not, you must contact technical support.

Shutting down the degraded controller

You can shut down or take over the degraded controller using different procedures, depending on the storage system hardware configuration.

Shutting down the controller

To shut down the degraded controller, you must determine the status of the controller and, if necessary, take over the controller so that the healthy controller continues to serve data for the degraded controller's storage.

Before you begin

- If you have a cluster with more than two controllers, check the health and Epsilon from advanced mode: `cluster show -epsilon*`
- If the cluster is not in quorum or a controller that is not the degraded controller shows `false` for eligibility and health, correct the issue before proceeding to the next step.

Step 1. If Epsilon resides in the degraded controller:

a. Remove Epsilon from the degraded controller: `cluster modify -node` *impaired_node* `-epsilon false`

b. Assign Epsilon to a healthy controller in the cluster: `cluster modify -node` *healthy_node* `-epsilon true`

Step 2. Disable automatic giveback from the console of the healthy controller using the following command: `storage failover modify -node local -auto-giveback false`

Step 3. Take the degraded controller to the LOADER prompt by typing: `storage failover takeover <degraded controller name>` from the RJ45 Management Port of the degraded controller.

If the degraded controller is displaying...	Then...
The LOADER prompt	Go to the next step.
`Waiting for giveback...`	Press Ctrl-C, and then respond `y` when prompted.
System prompt or password prompt	Take over or halt the degraded controller: • Take over the degraded controller from the healthy controller: `storage failover takeover -ofnode` *impaired_node_name* When the degraded controller shows `Waiting for giveback...`, press Ctrl-C, and then respond `y`.

Step 4. If the system is in a dual-chassis HA pair, turn off the power supplies, and then unplug the degraded controller's power cords from the power source.

Opening the controller module

To access components inside the controller, you must first remove the controller module from the system and then remove the cover on the controller module.

About this task

A video for this task is available at:

- YouTube: https://www.youtube.com/playlist?list=PLYV5R7hVcs-CZwRXsocAOmi5RsaXDVZQG

Step 1. If you are not already grounded, properly ground yourself.

Step 2. Loosen the hook and loop strap binding the cables to the cable management device, and then unplug the system cables and SFPs (if needed) from the controller module, keeping track of where the cables were connected. Leave the cables in the cable management device so that when you reinstall the cable management device, the cables are organized.

Step 3. Remove and set aside the cable management devices from the left and right sides of the controller module.

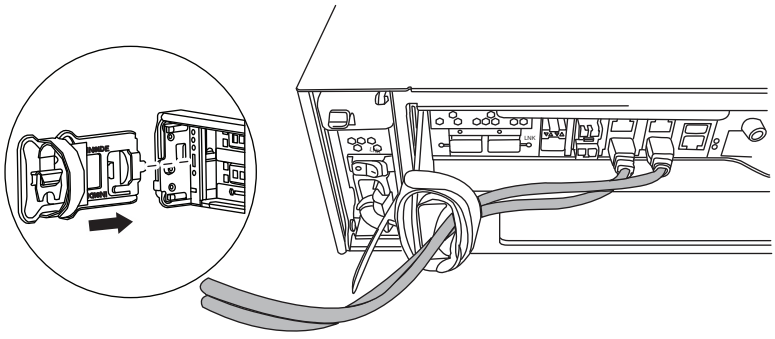

Step 4. Loosen the thumbscrew on the cam handle on the controller module.

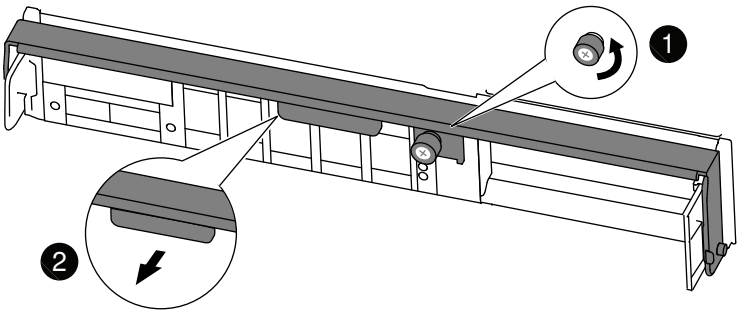

1	Thumbscrew
2	Cam handle

Step 5. Pull the cam handle downward and begin to slide the controller module out of the chassis. Make sure that you support the bottom of the controller module as you slide it out of the chassis.

Replacing a PCIe card

To replace a PCIe card, locate it within the controller and follow the specific sequence of steps.

About this task

A video for this task is available at:

- YouTube: https://www.youtube.com/playlist?list=PLYV5R7hVcs-CZwRXsocAOmi5RsaXDVZQG

Step 1. If you are not already grounded, properly ground yourself.

Step 2. Loosen the thumbscrew on the controller module side panel.

Step 3. Swing the side panel off the controller module.

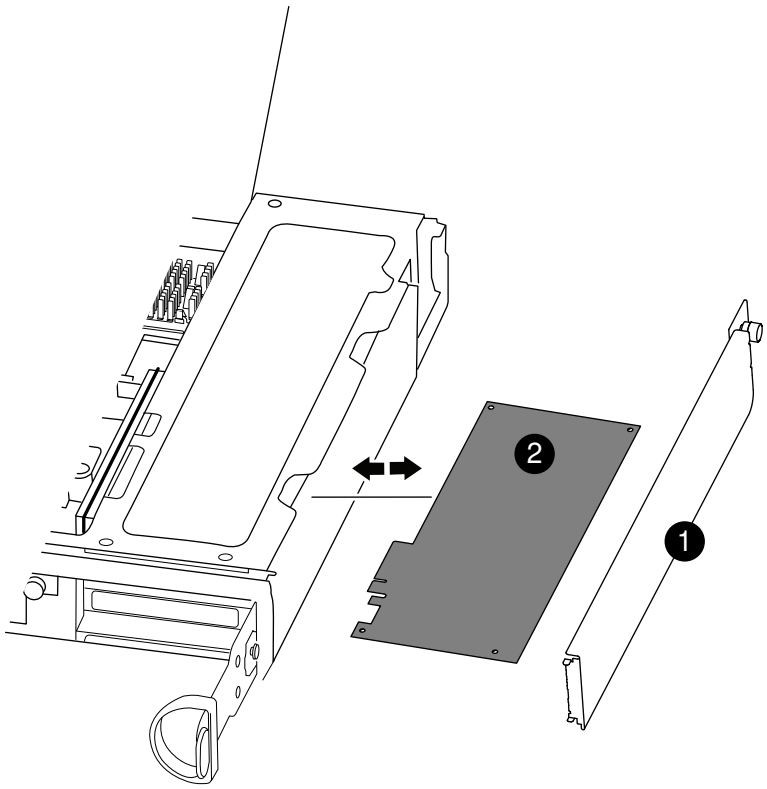

1	Side panel
2	PCIe card

Step 4. Remove the PCIe card from the controller module and set it aside.

Step 5. Install the replacement PCIe card. Be sure that you properly align the card in the slot and exert even pressure on the card when seating it in the socket. The adapter must be fully and evenly seated in the slot.

Note: If you are installing a card in the bottom slot and cannot see the card socket well, remove the top card so that you can see the card socket, install the card, and then reinstall the card you removed from the top slot.

Step 6. Close the side panel and tighten the thumbscrew.

Reinstalling the controller

After you replace a component within the controller module, you must reinstall the controller module in the system chassis and boot it.

About this task

A video for this task is available at:

- YouTube: https://www.youtube.com/playlist?list=PLYV5R7hVcs-CZwRXsocAOmi5RsaXDVZQG

Step 1. If you are not already grounded, properly ground yourself.

Step 2. Align the end of the controller module with the opening in the chassis, and then gently push the controller module halfway into the system.

Note: Do not completely insert the controller module in the chassis until instructed to do so.

Step 3. Recable the system, as needed.If you removed the media converters (SFPs), remember to reinstall them if you are using fiber optic cables.

Step 4. Complete the reinstallation of the controller module: The controller module begins to boot as soon as it is fully seated in the chassis. Be prepared to interrupt the boot process.

a. With the cam handle in the open position, firmly push the controller module in until it meets the midplane and is fully seated, and then close the cam handle to the locked position.

Attention: Do not use excessive force when sliding the controller module into the chassis; you might damage the connectors.

b. Tighten the thumbscrew on the cam handle on back of the controller module.

c. If you have not already done so, reinstall the cable management device.

d. Bind the cables to the cable management device with the hook and loop strap.

e. Reconnect the power cables to the power supplies and to the power sources, and then turn on the power to start the boot process.

Step 5. Return the controller to normal operation:

If your system is in...	Issue this command from the partner's console...
An HA pair	`storage failover giveback -ofnode` *impaired_node_name*

Completing the replacement process

After you replace the part, you can return the failed part to Lenovo, as described in the RMA instructions shipped with the kit. Contact technical support at Lenovo Data Center Support if you need the RMA number or additional help with the replacement procedure.

Replacing a DIMM

You must replace a DIMM in the controller module when your system registers an increasing number of correctable error correction codes (ECC); failure to do so causes a system panic.

Before you begin

All other components in the system must be functioning properly; if not, you must contact technical support.

You must replace the failed component with a replacement FRU component you received from your provider.

Shutting down the degraded controller

You can shut down or take over the degraded controller using different procedures, depending on the storage system hardware configuration.

Shutting down the controller

To shut down the degraded controller, you must determine the status of the controller and, if necessary, take over the controller so that the healthy controller continues to serve data for the degraded controller's storage.

Before you begin

- If you have a cluster with more than two controllers, check the health and Epsilon from advanced mode: `cluster show -epsilon*`
- If the cluster is not in quorum or a controller that is not the degraded controller shows `false` for eligibility and health, correct the issue before proceeding to the next step.

Step 1. If Epsilon resides in the degraded controller:

a. Remove Epsilon from the degraded controller: `cluster modify -node` *impaired_node* `-epsilon false`

b. Assign Epsilon to a healthy controller in the cluster: `cluster modify -node` *healthy_node* `-epsilon true`

Step 2. Disable automatic giveback from the console of the healthy controller using the following command: `storage failover modify -node local -auto-giveback false`

Step 3. Take the degraded controller to the LOADER prompt by typing: `storage failover takeover <degraded controller name>` from the RJ45 Management Port of the degraded controller.

If the degraded controller is displaying...	Then...
The LOADER prompt	Go to the next step.
`Waiting for giveback...`	Press Ctrl-C, and then respond `y` when prompted.
System prompt or password prompt	Take over or halt the degraded controller: • Take over the degraded controller from the healthy controller: `storage failover takeover -ofnode` *impaired_node_name* When the degraded controller shows `Waiting for giveback...`, press Ctrl-C, and then respond `y`.

Step 4. If the system is in a dual-chassis HA pair, turn off the power supplies, and then unplug the degraded controller's power cords from the power source.

Opening the controller module

To access components inside the controller, you must first remove the controller module from the system and then remove the cover on the controller module.

About this task

A video for this task is available at:

- YouTube: https://www.youtube.com/playlist?list=PLYV5R7hVcs-CZwRXsocAOmi5RsaXDVZQG

Step 1. If you are not already grounded, properly ground yourself.

Step 2. Loosen the hook and loop strap binding the cables to the cable management device, and then unplug the system cables and SFPs (if needed) from the controller module, keeping track of where the cables were connected. Leave the cables in the cable management device so that when you reinstall the cable management device, the cables are organized.

Step 3. Remove and set aside the cable management devices from the left and right sides of the controller module.

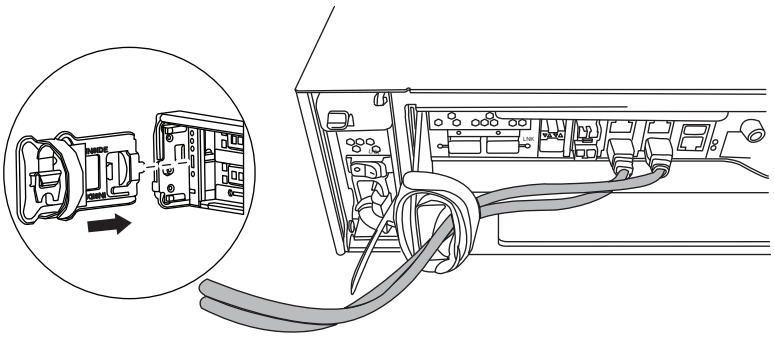

Step 4. Loosen the thumbscrew on the cam handle on the controller module.

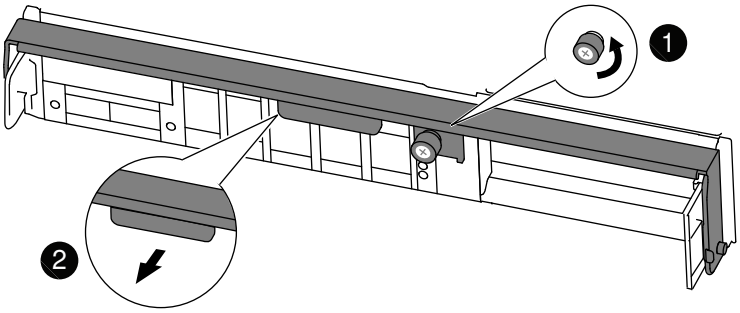

1	Thumbscrew
2	Cam handle

Step 5. Pull the cam handle downward and begin to slide the controller module out of the chassis. Make sure that you support the bottom of the controller module as you slide it out of the chassis.

Replacing the DIMMs

To replace the DIMMs, locate them inside the controller and follow the specific sequence of steps.

About this task

A video for this task is available at:

- YouTube: https://www.youtube.com/playlist?list=PLYV5R7hVcs-CZwRXsocAOmi5RsaXDVZQG

Step 1. If you are not already grounded, properly ground yourself.

Step 2. Check the NVMEM LED on the controller module.You must perform a clean system shutdown before replacing system components to avoid losing unwritten data in the nonvolatile memory (NVMEM). The LED is located on the back of the controller module. Look for the following icon:

Step 3. If the NVMEM LED is not flashing, there is no content in the NVMEM; you can skip the following steps and proceed to the next task in this procedure.

Step 4. Unplug the battery:

Attention: The NVMEM LED blinks while destaging contents to the flash memory when you halt the system. After the destage is complete, the LED turns off.

- If power is lost without a clean shutdown, the NVMEM LED flashes until the destage is complete, and then the LED turns off.
- If the LED is on and power is on, unwritten data is stored on NVMEM. This typically occurs during an uncontrolled shutdown after Data ONTAP has successfully booted.

a. Open the CPU air duct and locate the NVMEM battery.

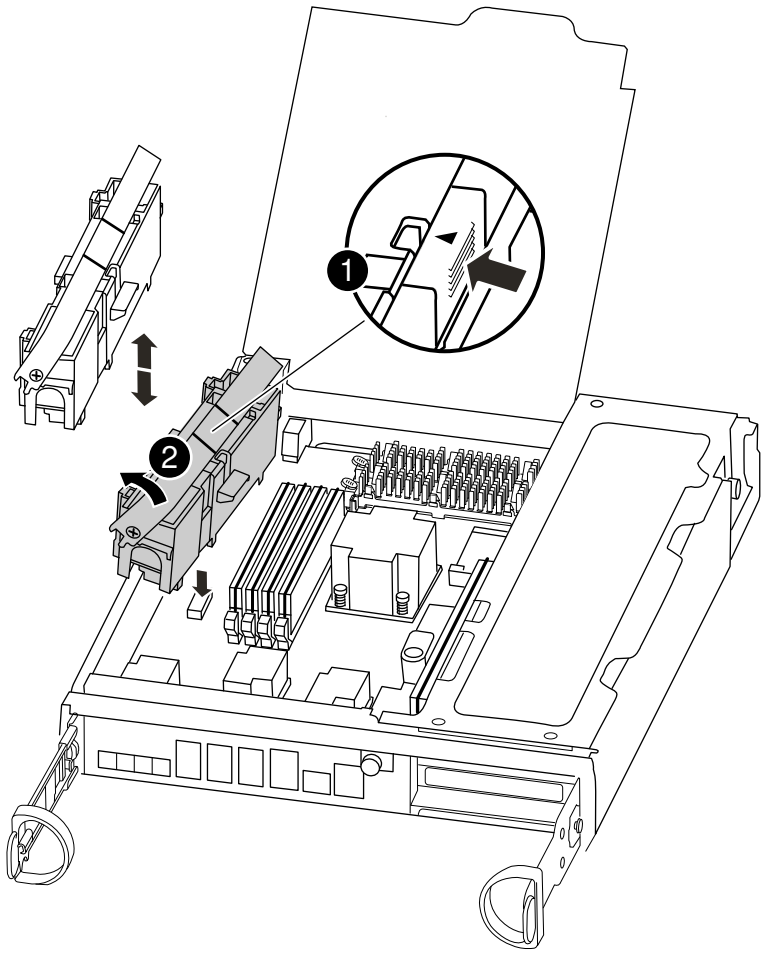

1	NVMEM battery lock tab
2	NVMEM battery

b. Locate the battery plug and squeeze the clip on the face of the battery plug to release the plug from the socket, and then unplug the battery cable from the socket.

c. Wait a few seconds, and then plug the battery back into the socket.

Step 5. Return to step 2 of this procedure to recheck the NVMEM LED.

Step 6. Locate the DIMMs on your controller.

Note: Each system memory DIMM has an LED located on the board next to each DIMM slot. Verify that each DIMM is operating properly using the LED states.

Step 7. Note the orientation of the DIMM in the socket so that you can insert the replacement DIMM in the proper orientation.

Step 8. Slowly push apart on the two DIMM ejector tabs, on either side of the DIMM to eject the DIMM from its slot, and then slide it out of the slot.

Attention: Carefully hold the DIMM by the edges to avoid pressure on the components on the DIMM circuit board.

The following illustration shows the location of system DIMMs:

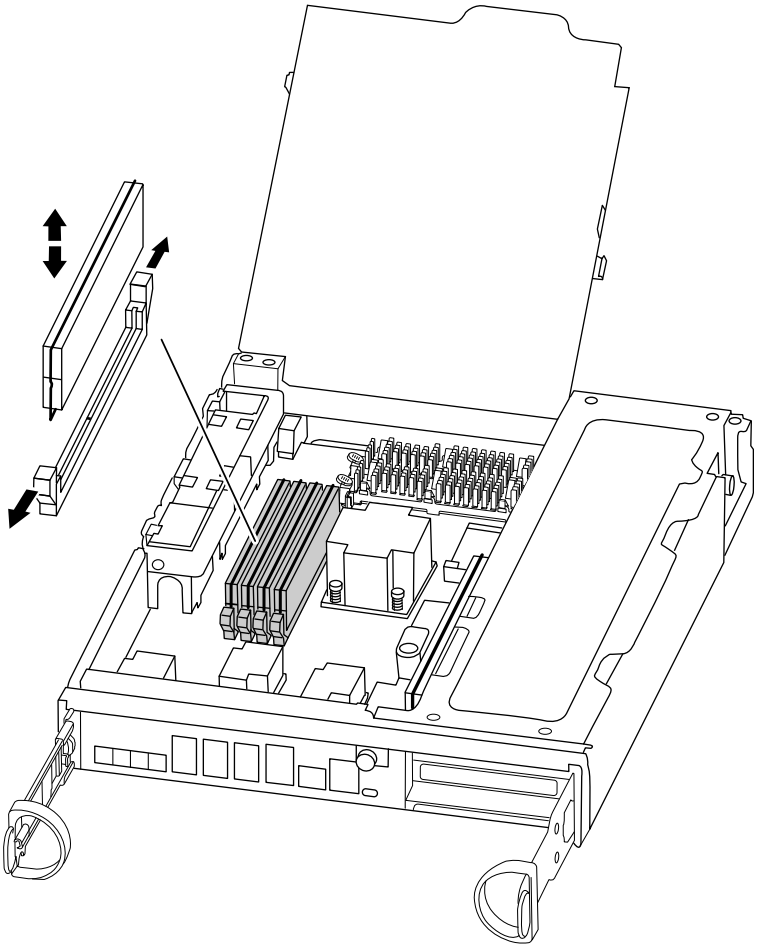

Step 9. Remove the replacement DIMM from the antistatic shipping bag, hold the DIMM by the corners, and align it to the slot. The notch among the pins on the DIMM should line up with the tab in the socket.

Step 10. Make sure that the DIMM latches on the connector are in the open position, and then insert the DIMM squarely into the slot.The DIMM fits tightly in the slot, but should go in easily. If not, realign the DIMM with the slot and reinsert it.

Attention: Visually inspect the DIMM to verify that it is evenly aligned and fully inserted into the slot.

Step 11. Push carefully, but firmly, on the top edge of the DIMM until the latches snap into place over the notches at the ends of the DIMM.

Step 12. Locate the NVMEM battery plug socket and squeeze the clip on the face of the battery cable plug to insert it into the socket.Make sure that the plug locks down onto the controller module.

Step 13. Close the controller module cover.

Reinstalling the controller

After you replace a component within the controller module, you must reinstall the controller module in the system chassis and boot it to a state where you can run diagnostic tests on the replaced component.

About this task

A video for this task is available at:

- YouTube: https://www.youtube.com/playlist?list=PLYV5R7hVcs-CZwRXsocAOmi5RsaXDVZQG

Step 1. If you are not already grounded, properly ground yourself.

Step 2. Align the end of the controller module with the opening in the chassis, and then gently push the controller module halfway into the system.

Note: Do not completely insert the controller module in the chassis until instructed to do so.

Step 3. Recable the system, as needed.If you removed the media converters (SFPs), remember to reinstall them if you are using fiber optic cables.

Step 4. Complete the reinstallation of the controller module: The controller module begins to boot as soon as it is fully seated in the chassis. Be prepared to interrupt the boot process.

a. With the cam handle in the open position, firmly push the controller module in until it meets the midplane and is fully seated, and then close the cam handle to the locked position.

Attention: Do not use excessive force when sliding the controller module into the chassis; you might damage the connectors.

b. Tighten the thumbscrew on the cam handle on back of the controller module.

c. If you have not already done so, reinstall the cable management device.

d. Bind the cables to the cable management device with the hook and loop strap.

e. As each controller starts the booting, press `Ctrl-C` to interrupt the boot process when you see the message `Press Ctrl-C for Boot Menu`.

f. Select the option to boot to Maintenance mode from the displayed menu.

Running system-level diagnostics

After installing a new DIMM, you should run diagnostics.

Before you begin

Your system must be at the LOADER prompt to get to the maintenance menu to start System Level Diagnostics.

All commands in the diagnostic procedures are issued from the controller where the component is being replaced.

Step 1. If the controller to be serviced is not at the LOADER prompt, perform the following steps:

a. Select the option to boot to Maintenance mode by typing: `halt`

b. Once at the LOADER prompt, type `boot_ontap menu`

c. When the system appears at the selection menu, choose option 5 to go into Maintenance mode.

Step 2. Run diagnostics on the caching module: `sldiag device run -dev fcache`

Step 3. Run diagnostics on the system memory: `sldiag device run -dev mem`

Step 4. Verify that no hardware problems resulted from the replacement of the DIMMs: `sldiag device status -dev mem -long -state failed`
System-level diagnostics returns you to the prompt if there are no test failures, or lists the full status of failures resulting from testing the component.

Step 5. Proceed based on the result of the preceding step:

<table>
<tr><th>If the system-level diagnostics tests...</th><th>Then...</th></tr>
<tr><td>Were completed without any failures</td><td>

Clear the status logs: <code>sldiag device clearstatus</code>
Verify that the log was cleared: <code>sldiag device status</code>

The following default response is displayed:

<code>SLDIAG: No log messages are present.</code>
Exit Maintenance mode: <code>halt</code>

The controller displays the LOADER prompt.
Boot the controller from the LOADER prompt: <code>boot_ontap</code>
Return the controller to normal operation:

<table>
<tr><th>If your controller is in...</th><th>Then...</th></tr>
<tr><td>An HA pair</td><td>Perform a give back: <code>storage failover giveback -ofnode replacement_node_name</code></td></tr>
</table>

You have completed system-level diagnostics.
</td></tr>
<tr><td>Resulted in some test failures</td><td>
Determine the cause of the problem:

Exit Maintenance mode: <code>halt</code>

After you issue the command, wait until the system stops at the LOADER prompt.
Turn off or leave on the power supplies, depending on how many controller modules are in the chassis:

If you have two controller modules in the chassis, leave the power supplies turned on to provide power to the other controller module.
If you have one controller module in the chassis, turn off the power supplies and unplug them from the power sources.

Verify that you have observed all the considerations identified for running system-level diagnostics, that cables are securely connected, and that hardware components are properly installed in the storage system.
Boot the controller module you are servicing, interrupting the boot by pressing

</td></tr>
</table>

If the system-level diagnostics tests...	Then...
	`Ctrl-C` when prompted to get to the Boot menu: • If you removed the controller in the previous step, fully seat the controller module you are servicing in the chassis. The controller module boots up when fully seated. 5. Select Boot to maintenance mode by typing: `boot_diags` 6. Repeat all of the steps necessary to perform the system level diagnostics for the cache module. 7. Exit Maintenance mode by entering the following command: `halt` After you issue the command, wait until the system stops at the LOADER prompt. 8. Rerun the system-level diagnostic test.

Completing the replacement process

After you replace the part, you can return the failed part to Lenovo, as described in the RMA instructions shipped with the kit. Contact technical support at Lenovo Data Center Support if you need the RMA number or additional help with the replacement procedure.

Replacing the boot media

The boot media stores a primary and secondary set of system (*boot image*) files that the system uses when it boots. Depending on your network configuration, you can perform either a nondisruptive or disruptive replacement.

Before you begin

You must have a USB flash drive, formatted to FAT32, with the appropriate amount of storage to hold the `image_xxx.tgz`.

- The nondisruptive and disruptive methods for replacing a boot media both require you to restore the `var` file system:
  - For nondisruptive replacement, the HA pair must be connected to a network to restore the `var` file system.
  - For disruptive replacement, you do not need a network connection to restore the `var` file system, but the process requires two reboots.
- You must replace the failed component with a replacement FRU component you received from your provider.
- It is important that you apply the commands in these steps on the correct controller:
  - The *degraded controller* is the controller on which you are performing maintenance.
  - The *healthy controller* is the HA partner of the degraded controller.

Shutting down the degraded controller

You can shut down or take over the degraded controller using different procedures, depending on the storage system hardware configuration.

Shutting down the controller

To shut down the degraded controller, you must determine the status of the controller and, if necessary, take over the controller so that the healthy controller continues to serve data for the degraded controller's storage.

Before you begin

- If you have a cluster with more than two controllers, check the health and Epsilon from advanced mode: `cluster show -epsilon*`
- If the cluster is not in quorum or a controller that is not the degraded controller shows `false` for eligibility and health, correct the issue before proceeding to the next step.

Step 1. If Epsilon resides in the degraded controller:

a. Remove Epsilon from the degraded controller: `cluster modify -node` *impaired_node* `-epsilon false`

b. Assign Epsilon to a healthy controller in the cluster: `cluster modify -node` *healthy_node* `-epsilon true`

Step 2. Disable automatic giveback from the console of the healthy controller using the following command: `storage failover modify -node local -auto-giveback false`

Step 3. Take the degraded controller to the LOADER prompt by typing: `storage failover takeover <degraded controller name>` from the RJ45 Management Port of the degraded controller.

If the degraded controller is displaying...	Then...
The LOADER prompt	Go to the next step.
`Waiting for giveback...`	Press Ctrl-C, and then respond `y` when prompted.
System prompt or password prompt	Take over or halt the degraded controller: • Take over the degraded controller from the healthy controller: `storage failover takeover -ofnode` *impaired_node_name* When the degraded controller shows `Waiting for giveback...`, press Ctrl-C, and then respond `y`.

Step 4. If the system is in a dual-chassis HA pair, turn off the power supplies, and then unplug the degraded controller's power cords from the power source.

Opening the controller module

To access components inside the controller, you must first remove the controller module from the system and then remove the cover on the controller module.

About this task

A video for this task is available at:

- YouTube: https://www.youtube.com/playlist?list=PLYV5R7hVcs-CZwRXsocAOmi5RsaXDVZQG

Step 1. If you are not already grounded, properly ground yourself.

Step 2. Loosen the hook and loop strap binding the cables to the cable management device, and then unplug the system cables and SFPs (if needed) from the controller module, keeping track of where the cables were connected. Leave the cables in the cable management device so that when you reinstall the cable management device, the cables are organized.

Step 3. Remove and set aside the cable management devices from the left and right sides of the controller module.

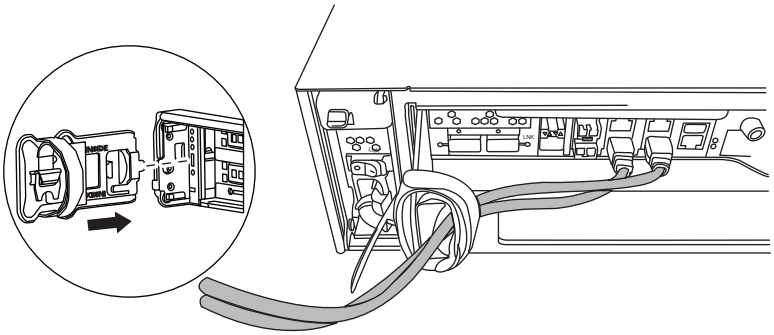

Step 4. Loosen the thumbscrew on the cam handle on the controller module.

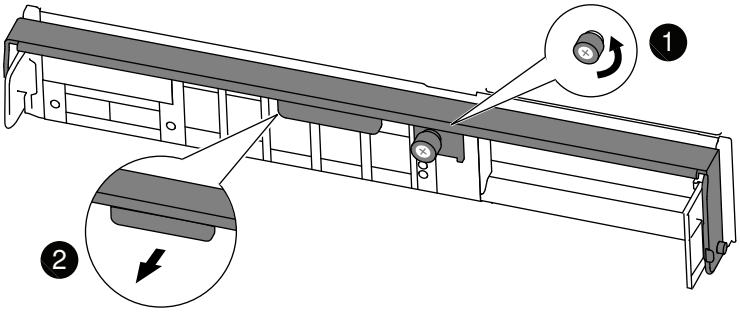

1	Thumbscrew
2	Cam handle

Step 5. Pull the cam handle downward and begin to slide the controller module out of the chassis. Make sure that you support the bottom of the controller module as you slide it out of the chassis.

Replacing the boot media

You must locate the boot media in the controller and follow the directions to replace it.

About this task

A video for this task is available at:

- YouTube: https://www.youtube.com/playlist?list=PLYV5R7hVcs-CZwRXsocAOmi5RsaXDVZQG

Step 1. If you are not already grounded, properly ground yourself.

Step 2. Locate the boot media using the following illustration or the FRU map on the controller module:

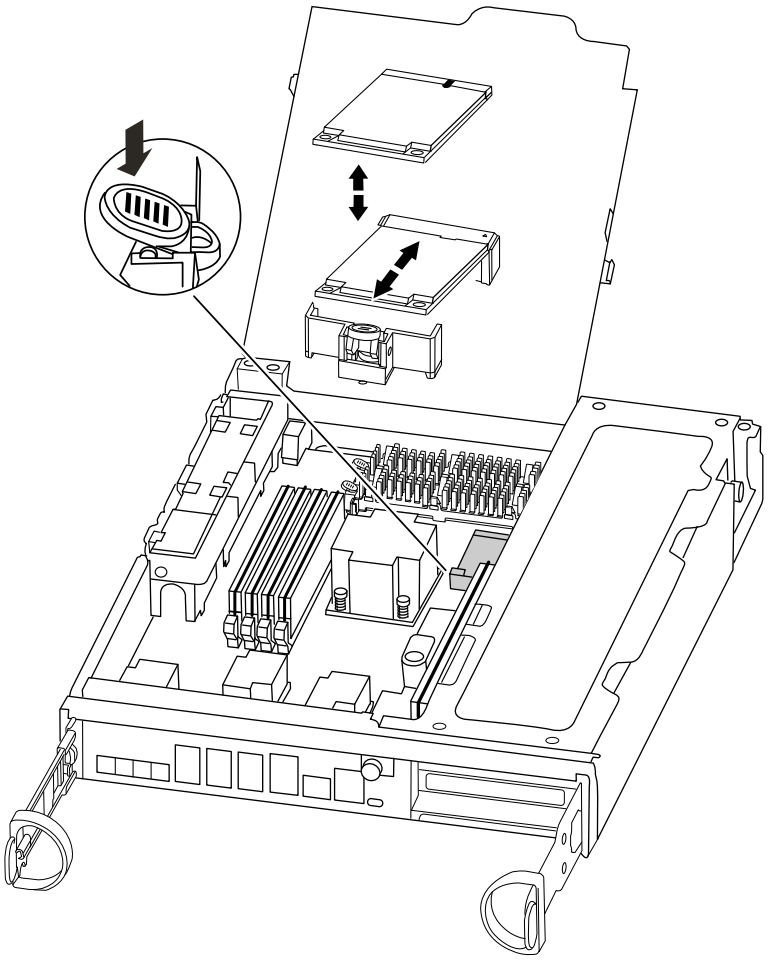

Step 3. Press the blue button on the boot media housing to release the boot media from its housing, and then gently pull it straight out of the boot media socket.

Note: Do not twist or pull the boot media straight up, because this could damage the socket or the boot media.

Step 4. Align the edges of the replacement boot media with the boot media socket, and then gently push it into the socket.

Step 5. Check the boot media to make sure that it is seated squarely and completely in the socket. If necessary, remove the boot media and reseat it into the socket.

Step 6. Push the boot media down to engage the locking button on the boot media housing.

Step 7. Close the controller module cover.

Transferring the boot image to the boot media

You can install the system image to the replacement boot media using a USB flash drive with the image installed on it. However, you must restore the `var` file system during this procedure.

Before you begin

You must have a USB flash drive, formatted to FAT32, with the following items:

- A copy of the same image version of ONTAP as what the degraded controller was running. You can download the appropriate image from the Downloads section on the Lenovo Data Center Support Site.
- If your system is an HA pair, you must have a network connection.

About this task

A video for this task is available at:

- YouTube: https://www.youtube.com/playlist?list=PLYV5R7hVcs-CZwRXsocAOmi5RsaXDVZQG

Step 1. Align the end of the controller module with the opening in the chassis, and then gently push the controller module halfway into the system.

Step 2. Reinstall the cable management device and recable the system, as needed. When recabling, remember to reinstall the media converters (SFPs) if they were removed.

Step 3. Insert the USB flash drive into the USB slot on the controller module.Make sure that you install the USB flash drive in the slot labeled for USB devices, and not in the USB console port.

Step 4. Push the controller module all the way into the system, making sure that the cam handle clears the USB flash drive, firmly push the cam handle to finish seating the controller module, push the cam handle to the closed position, and then tighten the thumbscrew.

Step 5. For systems with one controller in the chassis, reconnect the power and turn on the power supplies.
The system begins to boot and stops at the LOADER prompt.

Step 6. Verify that the environment variables are set as expected: `printenv`

If you are running ONTAP 9.4 or later, the environment variables are persistent and should be set correctly. However, it is a best practice to verify the settings.

If your system...	Then...
Uses Storage Encryption (NSE)	Make sure that *bootarg.storageencryption.support* is set to `true`. Reset it, if needed, with the `setenv` command. If you are using KMIP servers, make sure that the *kmip.int.** variables are properly set, usually during boot. ONTAP 9 Disks and Aggregates Power Guide
Has UTA2 adapters	Check the card settings with the `ucadmin` command and make any necessary changes using the `ucadmin modify` command.

Step 7. If necessary, reset any environment variables: `setenv` *environment_variable_name changed_value*

Step 8. Save any changes you made: `saveenv`

Step 9. Boot the recovery image: `boot_recovery` *image.tgz*

Note: If the `image.tgz` file is named something other than `image.tgz`, such as `boot_recovery 9_4.tgz`, you need to include the different file name in the `boot_recovery` command.

The system boots to the boot menu and prompts you for the boot image name.

Step 10. Enter the boot image name that is on the USB flash drive: *image_name*`.tgz`

After `image_name.tgz` is installed, the system prompts you to restore the backup configuration (the `var` file system) from the healthy controller.

Step 11. Restore the `var` file system:

If your system has...	Then...
A network connection	1. Press `y` when prompted to restore the backup configuration. 2. Set the healthy controller to advanced privilege level: `set -privilege advanced` 3. Run the restore backup command: `system node restore-backup -node local -target-address` *impaired_node_IP_address* 4. Return the controller to admin level: `set -privilege admin` 5. Press `y` when prompted to use the restored configuration. 6. Press `y` when prompted to reboot the controller.
No network connection	1. Press `n` when prompted to restore the backup configuration. 2. Reboot the system when prompted by the system. 3. Select the **Update flash from backup config** (sync flash) option from the displayed menu.If you are prompted to continue with the update, press `y`.

Step 12. Your next step depends on your system configuration:

If your system is in...	Then...
An HA pair	After the degraded controller is displaying the `Waiting for Giveback...` message, perform a giveback from the healthy controller: 1. Perform a giveback from the healthy controller: `storage failover giveback -ofnode` *partner_node_name* This initiates the process of returning ownership of the degraded controller's aggregates and volumes from the healthy controller back to the degraded controller. **Note:** If the giveback is vetoed, you can consider overriding the vetoes. If giveback is vetoed 2. Monitor the progress of the giveback operation by using the `storage failover show-giveback` command. 3. After the giveback operation is complete, confirm that the HA pair is healthy and that takeover is possible by using the `storage failover show` command. 4. Restore automatic giveback if you disabled it using the `storage failover modify` command.
A two-controller MetroCluster configuration	Proceed to the next step. The MetroCluster healing and switchback procedures are done in the next task in the replacement process.

Completing the replacement process

After you replace the part, you can return the failed part to Lenovo, as described in the RMA instructions shipped with the kit. Contact technical support at Lenovo Data Center Support if you need the RMA number or additional help with the replacement procedure.

Replacing the real-time clock battery

You replace the real-time clock (RTC) battery in the controller module so that your system's services and applications that depend on accurate time synchronization continue to function.

- You can use this procedure with all versions of ONTAP supported by your system
- All other components in the system must be functioning properly; if not, you must contact technical support.

Shutting down the degraded controller

You can shut down or take over the degraded controller using different procedures, depending on the storage system hardware configuration.

Shutting down the controller

To shut down the degraded controller, you must determine the status of the controller and, if necessary, take over the controller so that the healthy controller continues to serve data for the degraded controller's storage.

Before you begin

- If you have a cluster with more than two controllers, check the health and Epsilon from advanced mode: `cluster show -epsilon*`
- If the cluster is not in quorum or a controller that is not the degraded controller shows `false` for eligibility and health, correct the issue before proceeding to the next step.

Step 1. If Epsilon resides in the degraded controller:

a. Remove Epsilon from the degraded controller: `cluster modify -node` *impaired_node* `-epsilon false`

b. Assign Epsilon to a healthy controller in the cluster: `cluster modify -node` *healthy_node* `-epsilon true`

Step 2. Disable automatic giveback from the console of the healthy controller using the following command: `storage failover modify -node local -auto-giveback false`

Step 3. Take the degraded controller to the LOADER prompt by typing: `storage failover takeover <degraded controller name>` from the RJ45 Management Port of the degraded controller.

If the degraded controller is displaying...	Then...
The LOADER prompt	Go to the next step.
`Waiting for giveback...`	Press Ctrl-C, and then respond `y` when prompted.
System prompt or password prompt	Take over or halt the degraded controller: • Take over the degraded controller from the healthy controller: `storage failover takeover -ofnode` *impaired_node_name* When the degraded controller shows `Waiting for giveback...`, press Ctrl-C, and then respond `y`.

Step 4. If the system is in a dual-chassis HA pair, turn off the power supplies, and then unplug the degraded controller's power cords from the power source.

Opening the controller module

To access components inside the controller, you must first remove the controller module from the system and then remove the cover on the controller module.

About this task

A video for this task is available at:

- YouTube: https://www.youtube.com/playlist?list=PLYV5R7hVcs-CZwRXsocAOmi5RsaXDVZQG

Step 1. If you are not already grounded, properly ground yourself.

Step 2. Loosen the hook and loop strap binding the cables to the cable management device, and then unplug the system cables and SFPs (if needed) from the controller module, keeping track of where

the cables were connected. Leave the cables in the cable management device so that when you reinstall the cable management device, the cables are organized.

Step 3. Remove and set aside the cable management devices from the left and right sides of the controller module.

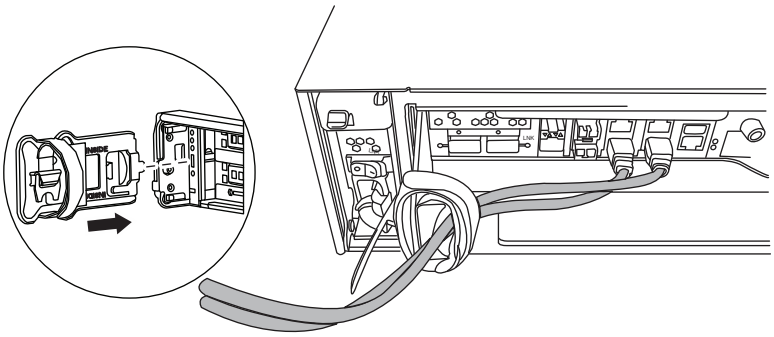

Step 4. Loosen the thumbscrew on the cam handle on the controller module.

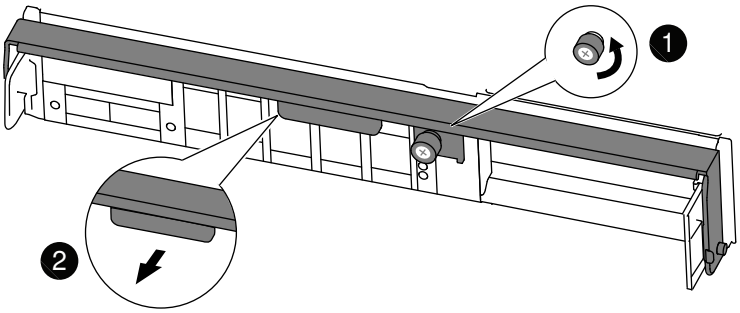

1	Thumbscrew
2	Cam handle

Step 5. Pull the cam handle downward and begin to slide the controller module out of the chassis. Make sure that you support the bottom of the controller module as you slide it out of the chassis.

Replacing the RTC Battery

To replace the RTC battery, locate them inside the controller and follow the specific sequence of steps.

About this task

A video for this task is available at:

- YouTube: https://www.youtube.com/playlist?list=PLYV5R7hVcs-CZwRXsocAOmi5RsaXDVZQG

Step 1. If you are not already grounded, properly ground yourself.

Step 2. Locate the RTC battery.

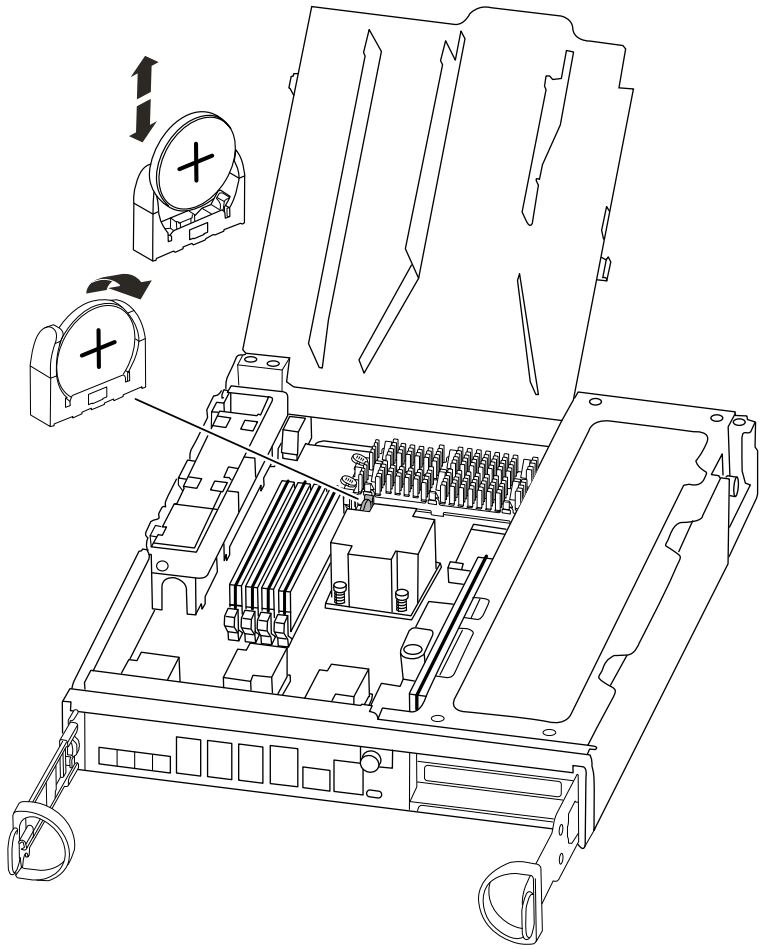

Step 3. Gently push the battery away from the holder, rotate it away from the holder, and then lift it out of the holder.

Note: Note the polarity of the battery as you remove it from the holder. The battery is marked with a plus sign and must be positioned in the holder correctly. A plus sign near the holder tells you how the battery should be positioned.

Step 4. Remove the replacement battery from the antistatic shipping bag.

Step 5. Locate the empty battery holder in the controller module.

Step 6. Note the polarity of the RTC battery, and then insert it into the holder by tilting the battery at an angle and pushing down.

Step 7. Visually inspect the battery to make sure that it is completely installed into the holder and that the polarity is correct.

Reinstalling the controller

After you replace a component within the controller module, you must reinstall the controller module in the system chassis and boot it.

About this task

A video for this task is available at:

- YouTube: https://www.youtube.com/playlist?list=PLYV5R7hVcs-CZwRXsocAOmi5RsaXDVZQG

Step 1. If you are not already grounded, properly ground yourself.

Step 2. Align the end of the controller module with the opening in the chassis, and then gently push the controller module halfway into the system.

Note: Do not completely insert the controller module in the chassis until instructed to do so.

Step 3. Recable the system, as needed.If you removed the media converters (SFPs), remember to reinstall them if you are using fiber optic cables.

Step 4. Complete the reinstallation of the controller module: The controller module begins to boot as soon as it is fully seated in the chassis. Be prepared to interrupt the boot process.

a. With the cam handle in the open position, firmly push the controller module in until it meets the midplane and is fully seated, and then close the cam handle to the locked position.

Attention: Do not use excessive force when sliding the controller module into the chassis; you might damage the connectors.

b. Tighten the thumbscrew on the cam handle on back of the controller module.

c. If you have not already done so, reinstall the cable management device.

d. Bind the cables to the cable management device with the hook and loop strap.

e. Reconnect the power cables to the power supplies and to the power sources, and then turn on the power to start the boot process.

Step 5. Return the controller to normal operation:

If your system is in...	Issue this command from the partner's console...
An HA pair	`storage failover giveback -ofnode` *impaired_node_name*

Completing the replacement process

After you replace the part, you can return the failed part to Lenovo, as described in the RMA instructions shipped with the kit. Contact technical support at Lenovo Data Center Support if you need the RMA number or additional help with the replacement procedure.

Replacing the chassis

To replace the chassis, you must move the power supplies, fans, and controller modules from the impaired chassis to the new chassis, and swap out the impaired chassis from the equipment rack or system cabinet with the new chassis of the same model as the impaired chassis.

Before you begin

All other components in the system must be functioning properly; if not, you must contact technical support.

- You can use this procedure with all versions of ONTAP supported by your system.
- This procedure is written with the assumption that you are moving the controller module or modules to the new chassis, and that the chassis is a new component from Lenovo.

Shutting down the controller

You must shut down the controller or controllers in the chassis prior to moving them to the new chassis.

Before you begin

- If you have a cluster with more than two controllers, check the health and Epsilon from advanced mode: `cluster show -epsilon*`
- If the cluster is not in quorum or a controller that is not the degraded controller shows `false` for eligibility and health, correct the issue before proceeding to the next step.

Step 1. If Epsilon resides in the degraded controller:

a. Remove Epsilon from the degraded controller: `cluster modify -node` *impaired_node* `-epsilon false`

b. Assign Epsilon to a healthy controller in the cluster: `cluster modify -node` *healthy_node* `-epsilon true`

Step 2. If your system has two controller modules, disable the HA pair.

If your system is running clustered ONTAP with...	Then...

Two controllers in the cluster	`cluster ha modify -configured false`
	
	`storage failover modify -node node0 -enabled false`

More than two controllers in the cluster	`storage failover modify -node node0 -enabled false`

Step 3. Halt the controller, pressing `y` when you are prompted to confirm the halt: `system node halt -node` *node_name*

The confirmation message looks like the following:

```
Warning: Rebooting or halting node
"node_name" in an HA-enabled cluster may result in client disruption or data access
failure. To ensure continuity of service, use the "storage
failover takeover" command. Are you sure you want to halt node
"node_name"? {y|n}:
```

Attention: You must perform a clean system shutdown before replacing the chassis to avoid losing unwritten data in the nonvolatile memory (NVMEM). If the NVMEM LED is flashing, there is content in the NVMEM that has not been saved to disk. You need to reboot the controller and start from the beginning of this procedure. If repeated attempts to cleanly shut down the controller fail, be aware that you might lose any data that was not saved to disk.

Step 4. Repeat the preceding step for the second controller module, if present. To avoid a possible quorum error message in an HA pair configuration, halt the second controller: `system node halt -node` *second_node_name* `-ignore-quorum-warnings true`

Swapping out a power supply

Swapping out a power supply when replacing a chassis involves turning off, disconnecting, and removing the power supply from the old chassis and installing and connecting it on the replacement chassis.

About this task

A video for this task is available at:

- YouTube: https://www.youtube.com/playlist?list=PLYV5R7hVcs-CZwRXsocAOmi5RsaXDVZQG

Step 1. If you are not already grounded, properly ground yourself.

Step 2. Turn off the power supply and disconnect the power cables:

a. Turn off the power switch on the power supply.

b. Open the power cord retainer, and then unplug the power cord from the power supply.

c. Unplug the power cord from the power source.

Step 3. Press down the release latch on the power supply cam handle, and then lower the cam handle to the fully open position to release the power supply from the mid plane.

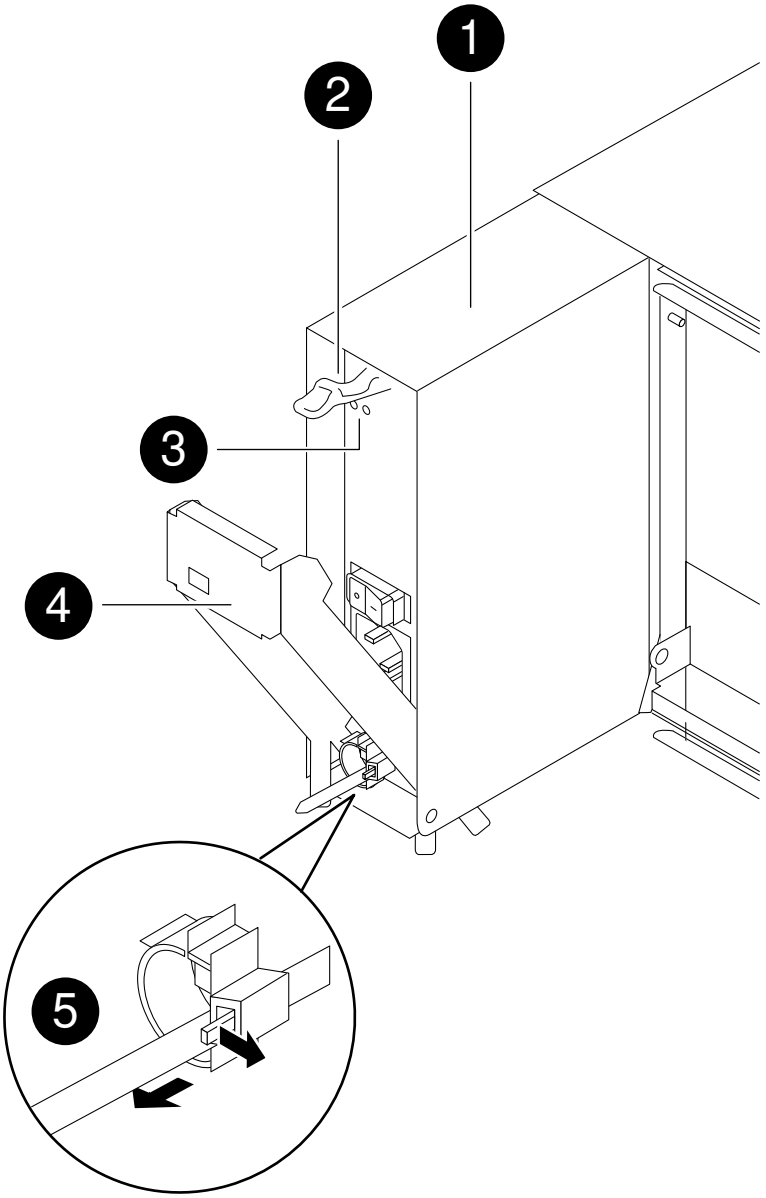

1	Power supply
2	Cam handle release latch
3	Power and Fault LEDs
4	Cam handle
5	Power cord locking mechanism

Step 4. Use the cam handle to slide the power supply out of the system.

CAUTION:
When removing a power supply, always use two hands to support its weight.

Step 5. Repeat the preceding steps for any remaining power supplies.

Step 6. Using both hands, support and align the edges of the power supply with the opening in the system chassis, and then gently push the power supply into the chassis using the cam handle. The power supplies are keyed and can only be installed one way.

Attention: Do not use excessive force when sliding the power supply into the system; you can damage the connector.

Step 7. Push firmly on the power supply cam handle to seat it all the way into the chassis, and then push the cam handle to the closed position, making sure that the cam handle release latch clicks into its locked position.

Step 8. Reconnect the power cord and secure it to the power supply using the power cord locking mechanism.

Attention: Only connect the power cord to the power supply; do not connect the power cord to a power source at this time.

Swapping out a fan

To swap out a fan module when replacing the chassis, you must perform a specific sequence of tasks.

About this task

A video for this task is available at:

- YouTube: https://www.youtube.com/playlist?list=PLYV5R7hVcs-CZwRXsocAOmi5RsaXDVZQG

Step 1. If you are not already grounded, properly ground yourself.

Step 2. Remove the bezel (if necessary) with two hands, by grasping the openings on each side of the bezel, and then pulling it toward you until the bezel releases from the four ball studs on the chassis frame.

Step 3. Press down the release latch on the fan module cam handle, and then pull the cam handle downward. The fan module moves a little bit away from the chassis.

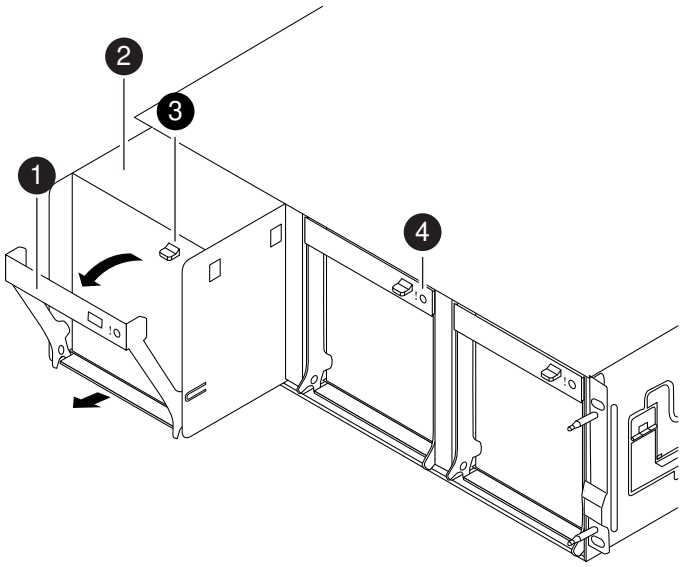

1	Cam handle
2	Fan module
3	Cam handle release latch
4	Fan module Attention LED

Step 4. Pull the fan module straight out from the chassis, making sure that you support it with your free hand so that it does not swing out of the chassis.

CAUTION:
The fan modules are short. Always support the bottom of the fan module with your free hand so that it does not suddenly drop free from the chassis and injure you.

Step 5. Set the fan module aside.

Step 6. Repeat the preceding steps for any remaining fan modules.

Step 7. Insert the fan module into the replacement chassis by aligning it with the opening, and then sliding it into the chassis.

Step 8. Push firmly on the fan module cam handle so that it is seated all the way into the chassis. The cam handle raises slightly when the fan module is completely seated.

Step 9. Swing the cam handle up to its closed position, making sure that the cam handle release latch clicks into the locked position.

Step 10. Repeat these steps for the remaining fan modules.

Step 11. Align the bezel with the ball studs, and then gently push the bezel onto the ball studs.

Removing the controller module

To replace the chassis, you must remove the controller module or modules from the old chassis.

About this task

A video for this task is available at:

- YouTube: https://www.youtube.com/playlist?list=PLYV5R7hVcs-CZwRXsocAOmi5RsaXDVZQG

Step 1. If you are not already grounded, properly ground yourself.

Step 2. Loosen the hook and loop strap binding the cables to the cable management device, and then unplug the system cables and SFPs (if needed) from the controller module, keeping track of where the cables were connected. Leave the cables in the cable management device so that when you reinstall the cable management device, the cables are organized.

Step 3. Remove and set aside the cable management devices from the left and right sides of the controller module.

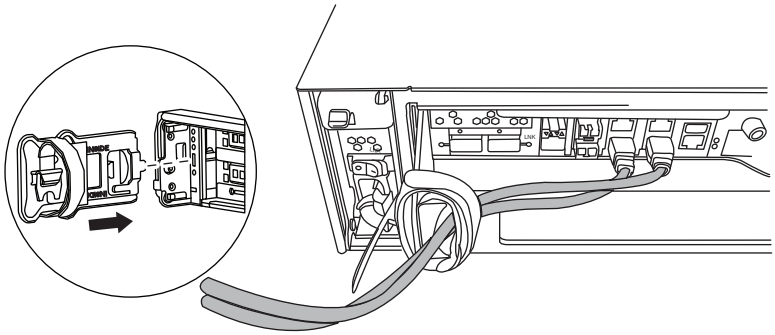

Step 4. Loosen the thumbscrew on the cam handle on the controller module.

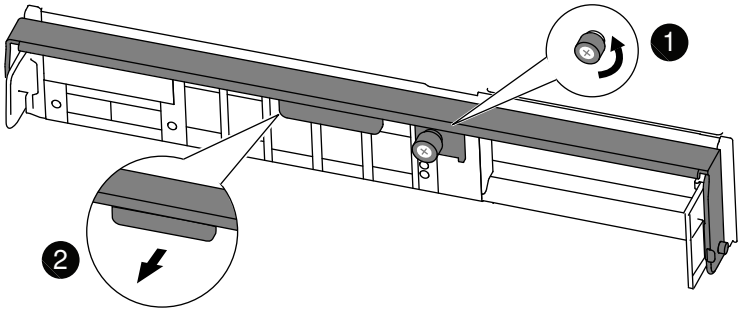

1	Thumbscrew
2	Cam handle

Step 5. Pull the cam handle downward and begin to slide the controller module out of the chassis. Make sure that you support the bottom of the controller module as you slide it out of the chassis.

Step 6. Set the controller module aside in a safe place, and repeat these steps if you have another controller module in the chassis.

Replacing a chassis from within the equipment rack or system cabinet

You must remove the existing chassis from the equipment rack or system cabinet before you can install the replacement chassis.

About this task

A video for this task is available at:

- YouTube: https://www.youtube.com/playlist?list=PLYV5R7hVcs-CZwRXsocAOmi5RsaXDVZQG

Step 1. Remove the screws from the chassis mount points.

Note: If the system is in a system cabinet, you might need to remove the rear tie-down bracket.

Step 2. With the help of two or three people, slide the old chassis off the rack rails in a system cabinet or *L* brackets in an equipment rack and set it aside.

Step 3. If you are not already grounded, properly ground yourself.

Step 4. Using two or three people, install the replacement chassis into the equipment rack or system cabinet by guiding the chassis onto the rack rails in a system cabinet or *L* brackets in an equipment rack.

Step 5. Slide the chassis all the way into the equipment rack or system cabinet.

Step 6. Secure the front of the chassis to the equipment rack or system cabinet, using the screws you removed from the old chassis.

Installing the controller

After you install the controller module and any other components into the new chassis, boot it to a state where you can run the interconnect diagnostic test.

About this task

For HA pairs with two controller modules in the same chassis, the sequence in which you install the controller module is especially important because it attempts to reboot as soon as you completely seat it in the chassis.

Note: The system might update system firmware when it boots. Do not abort this process.

A video for this task is available at:

- YouTube: https://www.youtube.com/playlist?list=PLYV5R7hVcs-CZwRXsocAOmi5RsaXDVZQG

Step 1. If you are not already grounded, properly ground yourself.

Step 2. Align the end of the controller module with the opening in the chassis, and then gently push the controller module halfway into the system.

Note: Do not completely insert the controller module in the chassis until instructed to do so.

Step 3. Recable the console to the controller, and then reconnect the management port.

Step 4. Repeat the preceding steps if there is a second controller to install in the new chassis.

Step 5. Complete the installation of the controller module:

If your system is in...	Then perform these steps...
An HA pair	1. With the cam handle in the open position, firmly push the controller module in until it meets the midplane and is fully seated, and then close the cam handle to the locked position. Tighten the thumbscrew on the cam handle on back of the controller module. **Attention:** Do not use excessive force when sliding the controller module into the chassis; you might damage the connectors. 2. If you have not already done so, reinstall the cable management device. 3. Bind the cables to the cable management device with the hook and loop strap. 4. Repeat the preceding steps for the second controller module in the new chassis.

Step 6. Connect the power supplies to different power sources, and then turn them on.

Step 7. Boot each controller to Maintenance mode:

a. As each controller starts the booting, press `Ctrl-C` to interrupt the boot process when you see the message `Press Ctrl-C for Boot Menu`.

Note: If you miss the prompt and the controller modules boot to ONTAP, enter `halt`, and then at the LOADER prompt enter `boot_ontap`, press `Ctrl-C` when prompted, and then repeat this step.

b. From the boot menu, select the option for Maintenance mode.

Verifying and setting the HA state of the chassis

You must verify the HA state of the chassis, and, if necessary, update the state to match your system configuration.

Step 1. In Maintenance mode, from either controller module, display the HA state of the local controller module and chassis: `ha-config show` The HA state should be the same for all components.

Step 2. Proceed based on the results of Step 1.

If the displayed system state for the chassis...	Then...
Matches your system configuration	Go to the next step.
Does not match your system configuration	1. Set the HA state for the chassis: `ha-config modify chassis` *HA-state* The value for *HA-state* can be one of the following: • ha • non-ha 2. Confirm that the setting has changed: `ha-config show`

Step 3. If you have not already done so, recable the rest of your system.

Step 4. The next step depends on your system configuration.

If your system is in...	Then...
An HA pair with a second controller module	Exit Maintenance mode: `halt` The LOADER prompt appears.

Running system-level diagnostics

After installing a new chassis, you should run interconnect diagnostics.

Before you begin

Your system must be at the LOADER prompt to get to the maintenance menu to start System Level Diagnostics.

All commands in the diagnostic procedures are issued from the controller where the component is being replaced.

Step 1. If the controller to be serviced is not at the LOADER prompt, perform the following steps:

a. Select the option to boot to Maintenance mode by typing: `halt`

b. Once at the LOADER prompt, type `boot_ontap menu`

c. When the system appears at the selection menu, choose option 5 to go into Maintenance mode.

Step 2. Repeat the previous step on the second controller if you are in an HA configuration.

Note: Both controllers must be in Maintenance mode to run the interconnect test.

Step 3. Run diagnostics on the caching module: `sldiag device run -dev fcache`

Step 4. Enable the interconnect diagnostics tests from the Maintenance mode prompt: `sldiag device modify -dev interconnect -sel enable`

The interconnect tests are disabled by default and must be enabled to run separately.

Step 5. Run the interconnect diagnostics test from the Maintenance mode prompt: `sldiag device run -dev interconnect`

You only need to run the interconnect test from one controller.

Step 6. Verify that no hardware problems resulted from the replacement of the chassis: `sldiag device status -dev interconnect -long -state failed`
System-level diagnostics returns you to the prompt if there are no test failures, or lists the full status of failures resulting from testing the component.

Step 7. Proceed based on the result of the preceding step.

<table>
<tr><th>If the system-level diagnostics tests...</th><th>Then...</th></tr>
<tr><td>Were completed without any failures</td><td>

Clear the status logs: <code>sldiag device clearstatus</code>
Verify that the log was cleared: <code>sldiag device status</code>

The following default response is displayed:

<code>SLDIAG: No log messages are present.</code>
Exit Maintenance mode on both controllers: <code>halt</code>

The system displays the LOADER prompt.

Attention: You must exit Maintenance mode on both controllers before proceeding any further.
Enter the following command on both controllers at the LOADER prompt: <code>boot_ontap</code>
Return the controller to normal operation:

<table>
<tr><th>If your system is running ONTAP...</th><th>Then...</th></tr>
<tr><td>With two controllers in the cluster</td><td>Issue these commands: <code>node::> cluster ha modify -configured true</code>
<code>node::> storage failover modify -node node0 -enabled true</code></td></tr>
<tr><td>With more than two controllers in the cluster</td><td>Issue this command: <code>node::> storage failover modify -node node0 -enabled true</code></td></tr>
</table>

You have completed system-level diagnostics.
</td></tr>
<tr><td>Resulted in some test failures</td><td>Determine the cause of the problem.

Exit Maintenance mode: <code>halt</code>
Perform a clean shutdown, and then disconnect the power supplies.
Verify that you have observed all of the considerations identified for running system-level diagnostics, that cables are securely connected, and that hardware components are properly installed in the storage system.
Reconnect the power supplies, and then power on the storage system.

</td></tr>
</table>

If the system-level diagnostics tests...	Then...
	5. Rerun the system-level diagnostics test.

Completing the replacement process

After you replace the part, you can return the failed part to Lenovo, as described in the RMA instructions shipped with the kit. Contact technical support at Lenovo Data Center Support if you need the RMA number or additional help with the replacement procedure.

Important information after replacing the chassis

Note: After replacing the chassis, move the system tag from the old chassis to the new chassis.

Chapter 5. System level diagnostics

Introduction to system-level diagnostics

System-level diagnostics provides a command-line interface for tests that search for and determine hardware problems on supported storage systems. You use system-level diagnostics to confirm that a specific component is operating properly or to help identify faulty components.

System-level diagnostics is available for supported storage systems only. Entering system-level diagnostics at the command-line interface of unsupported storage systems generates an error message.

You run system-level diagnostics after one of the following common troubleshooting situations:

- Initial system installation
- Addition or replacement of hardware components
- System panic caused by an unidentified hardware failure
- Access to a specific device becomes intermittent or the device becomes unavailable
- System response time becomes sluggish

To run system-level diagnostics, you must already be running Data ONTAP because you need to reach the **Maintenance mode boot** option in Data ONTAP. There are several approaches to get to this option, but this is the recommended approach taken in the procedures documented in this guide. Some hardware components in your system may require a specific approach, and this would be documented in the applicable field replaceable unit (FRU) flyer. This guide does not provide detailed definitions of specific commands, subcommands, tests, or conditions.

Once the command is entered, the tests run in the background and the passed or failed outcome of the tests is logged in the internal memory-based log, which has a fixed size. Some tests are utilities and will simply state completed rather than passed or failed. After you run the appropriate tests, the procedures documented in this guide help you generate status report. Once the test results show a successful completion of system-level diagnostics, it is a recommended best practice to clear the log.

In the event of test failures, the status reports will help technical support make appropriate recommendations. The failure could be resolved by reinstalling the FRU, by ensuring cables are connected, or by enabling specific tests recommended by technical support and then re-running those tests. If the failure cannot be resolved, then there is a hardware failure and the affected hardware must be replaced.

There are no error messages that require further definitions or explanations.

Requirements for running system-level diagnostics

Depending on the system-level diagnostic tests you are running, you need to be aware of time and system hardware requirements.

Each documented task has slight differences; use the recommended procedure for the task.

The following requirements must be met when running system-level diagnostics; otherwise, parts of the tests fail and error messages appear in the status report:

General requirements

- Each system being tested must be on a separate network.

© Copyright Lenovo 2019, 2023

The network interface test assigns unique static IP addresses, beginning with 172.25.150.23, to all available network interfaces on a storage system. This results in network interface ports on different storage controllers being assigned the same IP address. If all the systems being tested are on the same network, then `duplicate ip address` warning messages appear on the connected consoles. These warning messages do not affect the test results.

System memory requirements

- You need to set aside time when running memory tests; the larger the memory capacity of your storage system, the longer it takes.

NIC requirements

- All adjacent network interface ports on the system must be connected for best performance using a standard Ethernet cable.

  Examples of adjacent ports are e0a and e0b or e2c and e2d.

  Attention: e0M and e0P ports cannot be connected together due to an internal switch connection. In systems with e0M and e0P ports, the most efficient pairings are e0M with e0a and e0P with e0b.
- If there are a number of network interface ports on the system, you may need to run the NIC system-level diagnostic test several times, limiting each run to no more than two pairs each time.

SAS requirements

- When running the SAS system-level diagnostic tests, adjacent SAS ports must be connected for best performance; storage shelves must be disconnected from the ports.

FC-AL requirements

- When running the FC-AL system-level diagnostic tests, you must have loopback hoods on FC-AL interfaces on the motherboard or expansion adapters for best performance; all other cables for storage or Fibre Channel networks must be disconnected from the ports.

CNA requirements

- The use of loopback hoods is not a requirement for running CNA system-level diagnostics tests.

Interconnect requirements

- Both platform controller modules in a dual controller system must be in Maintenance mode for the interconnect system-level diagnostic test to run.

  Attention: You will receive a warning message if you attempt to run the interconnect system-level diagnostic test with other system-level diagnostic tests.

How to use online command-line help

You can get command-line syntax help from the command line by entering the name of the command followed by `help` or the question mark (?).

The fonts or symbols used in syntax help are as follows:

`keyword`	Specifies the name of a command or an option that must be entered as shown.
< > (less than, greater than symbols)	Specify that you must replace the variable identified inside the symbols with a value.
| (pipe)	Indicates that you must choose one of the elements on either side of the pipe.

[ ] (brackets)	Indicate that the element inside the brackets is optional.
{ } (braces)	Indicate that the element inside the braces is required.

You can also type the question mark at the command line for a list of all the commands that are available at the current level of administration (administrative or advanced).

The following example shows the result of entering the `environment help` command at the storage system command line. The command output displays the syntax help for the `environment` commands.

```
toaster> environment help
Usage: environment status |
[status] [shelf [<adapter>]] |
[status] [shelf_log] |
[status] [shelf_stats] |
[status] [shelf_power_status] |
[status] [chassis [all | list-sensors | Fan | Power | Temp | Power Supply | RTC Battery | NVRAM4-temperature-7 | NVRAM4-battery-7]]
```

Running system installation diagnostics

You run diagnostics after an initial system installation to identify the version of system-level diagnostics and the supported devices on your storage system, and to verify that the installation is successful and that all hardware is functioning properly.

Before you begin

Your storage system must already be running Data ONTAP.

Step 1. At the storage system prompt, switch to the LOADER prompt: `halt`

Step 2. Enter the following command at the LOADER prompt: `boot_diags`

Note: You must run this command from the LOADER prompt for system-level diagnostics to function properly. The `boot_diags` command starts special drivers designed specifically for system-level diagnostics.

Step 3. View the version of system-level diagnostics present on your storage system by entering the following command: `sldiag version show`
The version is displayed in the format System Level Diagnostics *X.nn.nn*. The *X* is an alpha reference and *nn.nn* are major and minor numeric references, respectively.

Step 4. Identify the device types in your new system installation so that you know which components to verify by entering the following command: `sldiag device types`
Your storage system displays some or all of the following devices:

- ata is an Advanced Technology Attachment device.
- bootmedia is the system booting device.
- cna is a Converged Network Adapter not connected to a network or storage device.
- env is motherboard environmentals.
- fcache is the Flash Cache adapter, also known as the Performance Acceleration Module 2.
- fcal is a Fibre Channel-Arbitrated Loop device not connected to a storage device or Fibre Channel network.
- fcvi is the Fiber Channel Virtual Interface not connected to a Fibre Channel network.
- interconnect or nvram-ib is the high-availability interface.

- mem is system memory.
- nic is a Network Interface Card not connected to a network.
- nvram is nonvolatile RAM.
- nvmem is a hybrid of NVRAM and system memory.
- sas is a Serial Attached SCSI device not connected to a disk shelf.
- serviceproc is the Service Processor.
- storage is an ATA, FC-AL, or SAS interface that has an attached disk shelf.
- toe is a TCP Offload Engine, a type of NIC.

Step 5. Run all the default selected diagnostic tests on your storage system by entering the following command: `sldiag device run`

Step 6. View the status of the test by entering the following command: `sldiag device status`
Your storage system provides the following output while the tests are still running:
```
There are still test(s) being processed.
```
After all the tests are complete, the following response appears by default:
```
*> <SLDIAG:_ALL_TESTS_COMPLETED>
```

Step 7. Verify that there are no hardware problems on your new storage system by entering the following command: `sldiag device status -long -state failed`

Example

The following example shows how the full status of the failures is displayed in a test run without the appropriate hardware:

```
*> sldiag device status -long -state failed

TEST START ------------------------------------------
DEVTYPE: nvram_ib
NAME: external  loopback test
START DATE: Sat Jan  3 23:10:55 GMT 2009

STATUS: Completed
ib3a: could not set loopback mode, test failed
END DATE: Sat Jan  3 23:11:04 GMT 2009

LOOP: 1/1
TEST END --------------------------------------------

TEST START ------------------------------------------
DEVTYPE: fcal
NAME: Fcal Loopback Test
START DATE: Sat Jan  3 23:10:56 GMT 2009

STATUS: Completed
Starting test on Fcal Adapter: 0b
Started gathering adapter info.
Adapter get adapter info OK
Adapter fc_data_link_rate: 1Gib
Adapter name: QLogic 2532
Adapter firmware rev: 4.5.2
Adapter hardware rev: 2

Started adapter get WWN string test.
Adapter get WWN string OK wwn_str: 5:00a:098300:035309

Started adapter interrupt test
Adapter interrupt test OK

Started adapter reset test.
```

```
Adapter reset OK

Started Adapter Get Connection State Test.
Connection State: 5
Loop on FC Adapter 0b is OPEN

Started adapter Retry LIP test
Adapter Retry LIP OK

ERROR: failed to init adaptor port for IOCTL call

ioctl_status.class_type = 0x1

ioctl_status.subclass = 0x3

ioctl_status.info = 0x0
 Started INTERNAL LOOPBACK:
INTERNAL LOOPBACK    OK
Error Count: 2  Run Time: 70 secs
>>>>> ERROR, please ensure the port has a shelf or plug.
END DATE: Sat Jan  3 23:12:07 GMT 2009

LOOP: 1/1
TEST END ------------------------------------------------
```

If the system-level diagnostics tests...	Then...
Were completed without any failures	There are no hardware problems and your storage system returns to the prompt. 1. Clear the status logs by entering the following command: `sldiag device clearstatus` 2. Verify that the log is cleared by entering the following command: `sldiag device status` The following default response is displayed: `SLDIAG: No log messages are present.` 3. Exit Maintenance mode by entering the following command: `halt` 4. Enter the following command at the Loader prompt to boot the storage system: `boot_ontap` You have completed system-level diagnostics.
Resulted in some test failures	Determine the cause of the problem. 1. Exit Maintenance mode by entering the following command: `halt` 2. Perform a clean shutdown and disconnect the power supplies. 3. Verify that you have observed all the considerations identified for running system-level diagnostics, that cables are securely connected, and that hardware components are properly installed in the storage system. 4. Reconnect the power supplies and power on the storage system. 5. Repeat Steps 1 through 7 of *Running system installation diagnostics*.

Running system panic diagnostics

Running diagnostics after your storage system suffers a system panic can help you to identify the possible cause of the panic.

Step 1. At the storage system prompt, switch to the LOADER prompt: `halt`

Step 2. Enter the following command at the LOADER prompt: `boot_diags`

Note: You must run this command from the LOADER prompt for system-level diagnostics to function properly. The `boot_diags` command starts special drivers designed specifically for system-level diagnostics.

Step 3. Run diagnostics on all the devices by entering the following command: `sldiag device run`

Step 4. View the status of the test by entering the following command: `sldiag device status`

Your storage system provides the following output while the tests are still running:

```
There are still test(s) being processed.
```

After all the tests are complete, you receive the following default response:

```
*> <SLDIAG:_ALL_TESTS_COMPLETED>
```

Step 5. Identify the cause of the system panic by entering the following command: `sldiag device status -long -state failed`

Example

The following example shows how the full status of the failures is displayed in a test run without the appropriate hardware:

```
*> sldiag device status -long -state failed

TEST START ------------------------------------------
DEVTYPE: nvram_ib
NAME: external  loopback test
START DATE: Sat Jan  3 23:10:55 GMT 2009

STATUS: Completed
ib3a: could not set loopback mode, test failed
END DATE: Sat Jan  3 23:11:04 GMT 2009

LOOP: 1/1
TEST END --------------------------------------------

TEST START ------------------------------------------
DEVTYPE: fcal
NAME: Fcal Loopback Test
START DATE: Sat Jan  3 23:10:56 GMT 2009

STATUS: Completed
Starting test on Fcal Adapter: 0b
Started gathering adapter info.
Adapter get adapter info OK
Adapter fc_data_link_rate: 1Gib
Adapter name: QLogic 2532
Adapter firmware rev: 4.5.2
Adapter hardware rev: 2

Started adapter get WWN string test.
Adapter get WWN string OK wwn_str: 5:00a:098300:035309

Started adapter interrupt test
Adapter interrupt test OK

Started adapter reset test.
Adapter reset OK

Started Adapter Get Connection State Test.
Connection State: 5
Loop on FC Adapter 0b is OPEN

Started adapter Retry LIP test
Adapter Retry LIP OK

ERROR: failed to init adaptor port for IOCTL call

ioctl_status.class_type = 0x1

ioctl_status.subclass = 0x3

ioctl_status.info = 0x0
 Started INTERNAL LOOPBACK:
INTERNAL LOOPBACK   OK
```

```
Error Count: 2  Run Time: 70 secs
>>>>> ERROR, please ensure the port has a shelf or plug.
END DATE: Sat Jan  3 23:12:07 GMT 2009

LOOP: 1/1
TEST END ------------------------------------------
```

If the system-level diagnostics tests...	Then...
Were completed without any failures	There are no hardware problems and your storage system returns to the prompt. 1. Clear the status logs by entering the following command: `sldiag device clearstatus` 2. Verify that the log is cleared by entering the following command: `sldiag device status` The following default response is displayed: `SLDIAG: No log messages are present.` 3. Exit Maintenance mode by entering the following command: `halt` 4. Enter the following command at the Loader prompt to boot the storage system: `boot_ontap` You have completed system-level diagnostics.
Resulted in some test failures	Determine the cause of the problem. 1. Exit Maintenance mode by entering the following command: `halt` 2. Perform a clean shutdown and disconnect the power supplies. 3. Verify that you have observed all the considerations identified for running system-level diagnostics, that cables are securely connected, and that hardware components are properly installed in the storage system. 4. Reconnect the power supplies and power on the storage system. 5. Repeat Steps 1 through 5 of *Running system panic diagnostics*.

After you finish

If the failures persist after repeating the steps, you need to replace the hardware.

Running slow system response diagnostics

Running diagnostics can help you identify the causes of slow system response times.

Step 1. At the storage system prompt, switch to the LOADER prompt: `halt`

Step 2. Enter the following command at the LOADER prompt: `boot_diags`

Note: You must run this command from the LOADER prompt for system-level diagnostics to function properly. The `boot_diags` command starts special drivers designed specifically for system-level diagnostics.

Step 3. Run diagnostics on all the devices by entering the following command: `sldiag device run`

Step 4. View the status of the test by entering the following command: `sldiag device status`
Your storage system provides the following output while the tests are still running:
```
There are still test(s) being processed.
```
After all the tests are complete, the following response appears by default:
```
*> <SLDIAG:_ALL_TESTS_COMPLETED>
```

Step 5. Identify the cause of the system sluggishness by entering the following command: `sldiag device status -long -state failed`

Example

The following example shows how the full status of the failures is displayed in a test run without the appropriate hardware:

```
*> sldiag device status -long -state failed

TEST START ------------------------------------------
DEVTYPE: nvram_ib
NAME: external  loopback test
START DATE: Sat Jan  3 23:10:55 GMT 2009

STATUS: Completed
ib3a: could not set loopback mode, test failed
END DATE: Sat Jan  3 23:11:04 GMT 2009

LOOP: 1/1
TEST END --------------------------------------------

TEST START ------------------------------------------
DEVTYPE: fcal
NAME: Fcal Loopback Test
START DATE: Sat Jan  3 23:10:56 GMT 2009

STATUS: Completed
Starting test on Fcal Adapter: 0b
Started gathering adapter info.
Adapter get adapter info OK
Adapter fc_data_link_rate: 1Gib
Adapter name: QLogic 2532
Adapter firmware rev: 4.5.2
Adapter hardware rev: 2

Started adapter get WWN string test.
Adapter get WWN string OK wwn_str: 5:00a:098300:035309

Started adapter interrupt test
Adapter interrupt test OK

Started adapter reset test.
Adapter reset OK

Started Adapter Get Connection State Test.
Connection State: 5
Loop on FC Adapter 0b is OPEN

Started adapter Retry LIP test
```

```
Adapter Retry LIP OK

ERROR: failed to init adaptor port for IOCTL call

ioctl_status.class_type = 0x1

ioctl_status.subclass = 0x3

ioctl_status.info = 0x0
 Started INTERNAL LOOPBACK:
INTERNAL LOOPBACK    OK
Error Count: 2  Run Time: 70 secs
>>>>> ERROR, please ensure the port has a shelf or plug.
END DATE: Sat Jan  3 23:12:07 GMT 2009

LOOP: 1/1
TEST END ------------------------------------------
```

If the system-level diagnostics tests...	Then...
Were completed without any failures	There are no hardware problems and your storage system returns to the prompt. 1. Clear the status logs by entering the following command: `sldiag device clearstatus` 2. Verify that the log is cleared by entering the following command: `sldiag device status` The following default response is displayed: `SLDIAG: No log messages are present.` 3. Exit Maintenance mode by entering the following command: `halt` 4. Enter the following command at the Loader prompt to boot the storage system: `boot_ontap` You have completed system-level diagnostics.
Resulted in some test failures	Determine the cause of the problem. 1. Exit Maintenance mode by entering the following command: `halt` 2. Perform a clean shutdown and disconnect the power supplies. 3. Verify that you observed all the requirements for running system-level diagnostics, that cables are securely connected, and that hardware components are properly installed in the storage system. 4. Reconnect the power supplies and power on the storage system. 5. Repeat Steps 1 through 5 of *Running slow system response diagnostics*.
Resulted in the same test failures	Technical support might recommend modifying the default settings on some of the tests to help identify the problem. 1. Modify the selection state of a specific device or type of device on your storage system by entering the following command: `sldiag device modify [-dev` *devtype*`|mb|slots`*slotnum*`] [-name` *device*`] [-selection` *enable*`|`*disable*`|`*default*`|`*only*`]` -selection *enable*|*disable*|*default*|*only* allows you to enable, disable, accept the default selection of a specified device type or named device, or only enable the

If the system-level diagnostics tests...	Then...
	specified device or named device by disabling all others first. 2. Verify that the tests were modified by entering the following command: `sldiag option show` 3. Repeat Steps 3 through 5 of *Running slow system response diagnostics*. 4. After you identify and resolve the problem, reset the tests to their default states by repeating substeps 1 and 2. 5. Repeat Steps 1 through 5 of *Running slow system response diagnostics*.

After you finish

If the failures persist after repeating the steps, you need to replace the hardware.

Running hardware installation diagnostics

You run diagnostics after adding or replacing hardware components in your storage system to verify that the component has no problems and that the installation is successful.

Step 1. At the storage system prompt, switch to the LOADER prompt: `halt`

Step 2. Enter the following command at the LOADER prompt: `boot_diags`

Note: You must run this command from the LOADER prompt for system-level diagnostics to function properly. The `boot_diags` command starts special drivers designed specifically for system-level diagnostics.

Step 3. Run the default tests on the particular device you added or replaced by entering the following command: `sldiag device run [-dev` *devtype*`|mb|slot`*slotnum*`] [-name` *device*`]`

- -dev *devtype* specifies the type of device to be tested.
  - ata is an Advanced Technology Attachment device.
  - bootmedia is the system booting device.
  - cna is a Converged Network Adapter not connected to a network or storage device.
  - env is motherboard environmentals.
  - fcache is the Flash Cache adapter, also known as the Performance Acceleration Module 2.
  - fcal is a Fibre Channel-Arbitrated Loop device not connected to a storage device or Fibre Channel network.
  - fcvi is the Fiber Channel Virtual Interface not connected to a Fibre Channel network.
  - interconnect or nvram-ib is the high-availability interface.
  - mem is system memory.
  - nic is a Network Interface Card not connected to a network.
  - nvram is nonvolatile RAM.
  - nvmem is a hybrid of NVRAM and system memory.
  - sas is a Serial Attached SCSI device not connected to a disk shelf.

  - serviceproc is the Service Processor.
  - storage is an ATA, FC-AL, or SAS interface that has an attached disk shelf.
  - toe is a TCP Offload Engine, a type of NIC.
- mb specifies that all the motherboard devices are to be tested.
- slot *slotnum* specifies that a device in a specific slot number is to be tested.
- -name *device* specifies a given device class and type.

Step 4. View the status of the test by entering the following command: `sldiag device status`
Your storage system provides the following output while the tests are still running:
```
There are still test(s) being processed.
```
After all the tests are complete, the following response appears by default:
```
*> <SLDIAG:_ALL_TESTS_COMPLETED>
```

Step 5. Verify that no hardware problems resulted from the addition or replacement of hardware components on your storage system by entering the following command: `sldiag device status [-dev` *devtype*`|mb|slots`*slotnum*`] [-name` *device*`] -long -state failed`

Example

The following example pulls up the full status of failures resulting from testing a newly installed FC-AL adapter:

```
*> sldiag device status -dev fcal -long -state failed

TEST START ------------------------------------------
DEVTYPE: fcal
NAME: Fcal Loopback Test
START DATE: Sat Jan  3 23:10:56 GMT 2009

STATUS: Completed
Starting test on Fcal Adapter: 0b
Started gathering adapter info.
Adapter get adapter info OK
Adapter fc_data_link_rate: 1Gib
Adapter name: QLogic 2532
Adapter firmware rev: 4.5.2
Adapter hardware rev: 2

Started adapter get WWN string test.
Adapter get WWN string OK wwn_str: 5:00a:098300:035309

Started adapter interrupt test
Adapter interrupt test OK

Started adapter reset test.
Adapter reset OK

Started Adapter Get Connection State Test.
Connection State: 5
Loop on FC Adapter 0b is OPEN

Started adapter Retry LIP test
Adapter Retry LIP OK

ERROR: failed to init adaptor port for IOCTL call

ioctl_status.class_type = 0x1

ioctl_status.subclass = 0x3

ioctl_status.info = 0x0
 Started INTERNAL LOOPBACK:
```

```
INTERNAL LOOPBACK   OK
Error Count: 2  Run Time: 70 secs
>>>>> ERROR, please ensure the port has a shelf or plug.
END DATE: Sat Jan  3 23:12:07 GMT 2009

LOOP: 1/1
TEST END ------------------------------------------
```

If the system-level diagnostics tests...	Then...
Were completed without any failures	There are no hardware problems and your storage system returns to the prompt. 1. Clear the status logs by entering the following command: `sldiag device clearstatus [-dev devtype|mb|slotslotnum]` 2. Verify that the log is cleared by entering the following command: `sldiag device status [-dev devtype|mb|slotslotnum]` The following default response is displayed: `SLDIAG: No log messages are present.` 3. Exit Maintenance mode by entering the following command: `halt` 4. Enter the following command at the Loader prompt to boot the storage system: `boot_ontap` You have completed system-level diagnostics.
Resulted in some test failures	Determine the cause of the problem. 1. Exit Maintenance mode by entering the following command: `halt` 2. Perform a clean shutdown and disconnect the power supplies. 3. Verify that you have observed all the considerations identified for running system-level diagnostics, that cables are securely connected, and that hardware components are properly installed in the storage system. 4. Reconnect the power supplies and power on the storage system. 5. Repeat Steps 1 through 6 of *Running hardware installation diagnostics*.

After you finish

If the failures persist after repeating the steps, you need to replace the hardware.

Running device failure diagnostics

Running diagnostics can help you determine why access to a specific device becomes intermittent or why the device becomes unavailable in your storage system.

Step 1. At the storage system prompt, switch to the LOADER prompt: `halt`

Step 2. Enter the following command at the LOADER prompt: `boot_diags`

Note: You must run this command from the LOADER prompt for system-level diagnostics to function properly. The `boot_diags` command starts special drivers designed specifically for system-level diagnostics.

Step 3. Run diagnostics on the device causing problems by entering the following command: `sldiag device run [-dev devtype|mb|slotslotnum] [-name device]`

- -dev *devtype* specifies the type of device to be tested.
  - ata is an Advanced Technology Attachment device.
  - bootmedia is the system booting device.
  - cna is a Converged Network Adapter not connected to a network or storage device.
  - env is motherboard environmentals.
  - fcache is the Flash Cache adapter, also known as the Performance Acceleration Module 2.
  - fcal is a Fibre Channel-Arbitrated Loop device not connected to a storage device or Fibre Channel network.
  - fcvi is the Fiber Channel Virtual Interface not connected to a Fibre Channel network.
  - interconnect or nvram-ib is the high-availability interface.
  - mem is system memory.
  - nic is a Network Interface Card not connected to a network.
  - nvram is nonvolatile RAM.
  - nvmem is a hybrid of NVRAM and system memory.
  - sas is a Serial Attached SCSI device not connected to a disk shelf.
  - serviceproc is the Service Processor.
  - storage is an ATA, FC-AL, or SAS interface that has an attached disk shelf.
  - toe is a TCP Offload Engine, a type of NIC.
- mb specifies that all the motherboard devices are to be tested.
- slot *slotnum* specifies that a device in a specific slot number is to be tested.
- -name *device* specifies a given device class and type.

Step 4. View the status of the test by entering the following command: `sldiag device status`
Your storage system provides the following output while the tests are still running:
```
There are still test(s) being processed.
```
After all the tests are complete, the following response appears by default:
```
*> <SLDIAG:_ALL_TESTS_COMPLETED>
```

Step 5. Identify any hardware problems by entering the following command: `sldiag device status [-dev devtype|mb|slotslotnum] [-name device] -long -state failed`

Example

The following example shows how the full status of failures resulting from testing the FC-AL adapter are displayed:

*> **sldiag device status fcal -long -state failed**

```
TEST START ------------------------------------------
DEVTYPE: fcal
NAME: Fcal Loopback Test
START DATE: Sat Jan  3 23:10:56 GMT 2009

STATUS: Completed
Starting test on Fcal Adapter: 0b
Started gathering adapter info.
Adapter get adapter info OK
Adapter fc_data_link_rate: 1Gib
Adapter name: QLogic 2532
Adapter firmware rev: 4.5.2
Adapter hardware rev: 2

Started adapter get WWN string test.
Adapter get WWN string OK wwn_str: 5:00a:098300:035309

Started adapter interrupt test
Adapter interrupt test OK

Started adapter reset test.
Adapter reset OK

Started Adapter Get Connection State Test.
Connection State: 5
Loop on FC Adapter 0b is OPEN

Started adapter Retry LIP test
Adapter Retry LIP OK

ERROR: failed to init adaptor port for IOCTL call

ioctl_status.class_type = 0x1

ioctl_status.subclass = 0x3

ioctl_status.info = 0x0
 Started INTERNAL LOOPBACK:
INTERNAL LOOPBACK   OK
Error Count: 2  Run Time: 70 secs
>>>>> ERROR, please ensure the port has a shelf or plug.
END DATE: Sat Jan  3 23:12:07 GMT 2009

LOOP: 1/1
TEST END --------------------------------------------
```

If the system-level diagnostics tests...	Then...
Resulted in some test failures	Determine the cause of the problem. 1. Exit Maintenance mode by entering the following command: `halt` 2. Perform a clean shutdown and disconnect the power supplies. 3. Verify that you have observed all the considerations identified for running system-level diagnostics, that cables are securely connected, and that hardware components are properly installed in the storage system. 4. Reconnect the power supplies and power on the storage system. 5. Repeat Steps 1 through 5 of *Running device failure diagnostics*.
Resulted in the same test failures	Technical support might recommend modifying the default settings on some of the tests to help identify the problem. 1. Modify the selection state of a specific device or type of device on your storage system by entering the following command: `sldiag device modify [-dev` *devtype*`|mb|slot`*slotnum*`] [-name` *device*`] [-selection` *enable*`|`*disable*`|`*default*`|`*only*`]` -selection *enable*|*disable*|*default*|*only* allows you to enable, disable, accept the default selection of a specified device type or named device, or only enable the specified device or named device by disabling all others first. 2. Verify that the tests were modified by entering the following command: `sldiag option show` 3. Repeat Steps 3 through 5 of *Running device failure diagnostics*. 4. After you identify and resolve the problem, reset the tests to their default states by repeating substeps 1 and 2. 5. Repeat Steps 1 through 5 of *Running device failure diagnostics*.
Were completed without any failures	There are no hardware problems and your storage system returns to the prompt. 1. Clear the status logs by entering the following command: `sldiag device clearstatus [-dev` *devtype*`|mb|slot`*slotnum*`]` 2. Verify that the log is cleared by entering the following command: `sldiag device`

If the system-level diagnostics tests...	Then...
	`status [-dev` *devtype*`|mb|slots`*slotnum*`]` The following default response is displayed: `SLDIAG: No log messages are present.` 3. Exit Maintenance mode by entering the following command: `halt` 4. Enter the following command at the Loader prompt to boot the storage system: `boot_ontap` You have completed system-level diagnostics.

After you finish

If the failures persist after repeating the steps, you need to replace the hardware.

Appendix A. Getting help and technical assistance

If you need help, service, or technical assistance or just want more information about Lenovo products, you will find a wide variety of sources available from Lenovo to assist you.

On the World Wide Web, up-to-date information about Lenovo systems, optional devices, services, and support are available at:

http://datacentersupport.lenovo.com

Note: This section includes references to IBM web sites and information about obtaining service. IBM is Lenovo's preferred service provider for ThinkSystem.

Before you call

Before you call, there are several steps that you can take to try and solve the problem yourself. If you decide that you do need to call for assistance, gather the information that will be needed by the service technician to more quickly resolve your problem.

Attempt to resolve the problem yourself

You can solve many problems without outside assistance by following the troubleshooting procedures that Lenovo provides in the online help or in the Lenovo product documentation. The Lenovo product documentation also describes the diagnostic tests that you can perform. The documentation for most systems, operating systems, and programs contains troubleshooting procedures and explanations of error messages and error codes. If you suspect a software problem, see the documentation for the operating system or program.

You can find the product documentation for your ThinkSystem products at the following location:

http://thinksystem.lenovofiles.com/help/index.jsp

You can take these steps to try to solve the problem yourself:

- Check all cables to make sure that they are connected.
- Check the power switches to make sure that the system and any optional devices are turned on.
- Check for updated software, firmware, and operating-system device drivers for your Lenovo product. The Lenovo Warranty terms and conditions state that you, the owner of the Lenovo product, are responsible for maintaining and updating all software and firmware for the product (unless it is covered by an additional maintenance contract). Your service technician will request that you upgrade your software and firmware if the problem has a documented solution within a software upgrade.
- If you have installed new hardware or software in your environment, check https://serverproven.lenovo.com and https://datacentersupport.lenovo.com/us/en/lsic to make sure that the hardware and software are supported by your product.
- Go to http://datacentersupport.lenovo.com and check for information to help you solve the problem.
  - Check the Lenovo forums at https://forums.lenovo.com/t5/Datacenter-Systems/ct-p/sv_eg to see if someone else has encountered a similar problem.

You can solve many problems without outside assistance by following the troubleshooting procedures that Lenovo provides in the online help or in the Lenovo product documentation. The Lenovo product documentation also describes the diagnostic tests that you can perform. The documentation for most systems, operating systems, and programs contains troubleshooting procedures and explanations of error

© Copyright Lenovo 2019, 2023

messages and error codes. If you suspect a software problem, see the documentation for the operating system or program.

Gathering information needed to call Support

If you believe that you require warranty service for your Lenovo product, the service technicians will be able to assist you more efficiently if you prepare before you call. You can also see http://datacentersupport.lenovo.com/warrantylookup for more information about your product warranty.

Gather the following information to provide to the service technician. This data will help the service technician quickly provide a solution to your problem and ensure that you receive the level of service for which you might have contracted.

- Hardware and Software Maintenance agreement contract numbers, if applicable
- Machine type number (Lenovo 4-digit machine identifier)
- Model number
- Serial number
- Current system UEFI and firmware levels
- Other pertinent information such as error messages and logs

As an alternative to calling Lenovo Support, you can go to the Service requests and PMRs website to submit an Electronic Service Request. Submitting an Electronic Service Request will start the process of determining a solution to your problem by making the pertinent information available to the service technicians. The Lenovo service technicians can start working on your solution as soon as you have completed and submitted an Electronic Service Request.

Collecting service data

Service data is collected automatically in the background. If the AutoSupport function is enabled on ONTAP, service data is automatically transmitted. To enable the AutoSupport function, do the following:

Step 1. Input the user name and password to enter the ONTAP main interface.

Step 2. Click **Cluster → Settings** from the left navigation pane.

Step 3. In the **AutoSupport** card, click the more icon .

Step 4. Select **Enable**.

Step 5. To configure how the AutoSupport data is sent, select **More options**.

Note: The available transport protocols are HTTP, HTTPS, and SMTP.

Step 6. If necessary, configure the proxy.

Step 7. Configure the mail-host and e-mail recipient that will receive the data.

Contacting Support

You can contact Support to obtain help for your issue.

You can receive hardware service through a Lenovo Authorized Service Provider. To locate a service provider authorized by Lenovo to provide warranty service, go to https://datacentersupport.lenovo.com/serviceprovider and use filter searching for different countries. For Lenovo support telephone numbers, see https://datacentersupport.lenovo.com/supportphonelist for your region support details.

Appendix B. Notice of Privacy Practices

Lenovo recognizes that privacy is of great importance to individuals everywhere – our customers, website visitors, product users...everyone. This is why the responsible use and protection of personal and other information under our care is a core Lenovo value.

Our full privacy statement is available at the link below. If you have any further questions or concerns, please feel free to reach us at privacy@lenovo.com.

https://www.lenovo.com/us/en/privacy/

To view this privacy statement in other languages, visit the sites below:

- Chinese: https://www.lenovo.com.cn/public/privacy.html
- English (UK): https://www3.lenovo.com/gb/en/privacy/
- English (Canada): https://www3.lenovo.com/ca/en/privacy/
- French (Canada): https://canada.lenovo.com/fr/sdwww3/ca/en/privacy/
- German: https://www.lenovo.com/de/de/privacy/
- French: https://www.lenovo.com/fr/fr/privacy/
- Swedish: https://www.lenovo.com/se/sv/privacy/
- Danish: https://www.lenovo.com/dk/da/privacy/
- Spanish: https://www.lenovo.com/es/es/privacy/
- Japanese: http://www.lenovo.com/privacy/jp/ja/
- Brazilian Portuguese: https://www.lenovo.com/br/pt/privacy/
- Italian: https://www.lenovo.com/it/it/privacy/
- Hungarian: https://www.lenovo.com/hu/hu/privacy/
- Russian: https://www.lenovo.com/ru/ru/privacy/
- Korean: https://www.lenovo.com/kr/ko/privacy/
- Polish: https://www.lenovo.com/pl/pl/privacy/

Our service provider NetApp will also collect certain information when you use this device. More information about NetApp's privacy practices is available at the link below:

https://www.netapp.com/us/legal/privacypolicy/index.aspx.

To view NetApp's privacy policy in other languages, visit the sites below:

- German: https://www.netapp.com/de/legal/privacypolicy/index.aspx
- Japanese: https://www.netapp.com/jp/legal/privacypolicy/index.aspx
- French: https://www.netapp.com/fr/legal/privacypolicy/index.aspx
- Spanish: https://www.netapp.com/es/legal/privacypolicy/index.aspx

© Copyright Lenovo 2019, 2023

Appendix C. Notices

Lenovo may not offer the products, services, or features discussed in this document in all countries. Consult your local Lenovo representative for information on the products and services currently available in your area.

Any reference to a Lenovo product, program, or service is not intended to state or imply that only that Lenovo product, program, or service may be used. Any functionally equivalent product, program, or service that does not infringe any Lenovo intellectual property right may be used instead. However, it is the user's responsibility to evaluate and verify the operation of any other product, program, or service.

Lenovo may have patents or pending patent applications covering subject matter described in this document. The furnishing of this document is not an offer and does not provide a license under any patents or patent applications. You can send inquiries in writing to the following:

Lenovo (United States), Inc.
1009 Think Place
Morrisville, NC 27560
U.S.A.
Attention: Lenovo VP of Intellectual Property

LENOVO PROVIDES THIS PUBLICATION “AS IS” WITHOUT WARRANTY OF ANY KIND, EITHER EXPRESS OR IMPLIED, INCLUDING, BUT NOT LIMITED TO, THE IMPLIED WARRANTIES OF NON-INFRINGEMENT, MERCHANTABILITY OR FITNESS FOR A PARTICULAR PURPOSE. Some jurisdictions do not allow disclaimer of express or implied warranties in certain transactions, therefore, this statement may not apply to you.

This information could include technical inaccuracies or typographical errors. Changes are periodically made to the information herein; these changes will be incorporated in new editions of the publication. Lenovo may make improvements and/or changes in the product(s) and/or the program(s) described in this publication at any time without notice.

The products described in this document are not intended for use in implantation or other life support applications where malfunction may result in injury or death to persons. The information contained in this document does not affect or change Lenovo product specifications or warranties. Nothing in this document shall operate as an express or implied license or indemnity under the intellectual property rights of Lenovo or third parties. All information contained in this document was obtained in specific environments and is presented as an illustration. The result obtained in other operating environments may vary.

Lenovo may use or distribute any of the information you supply in any way it believes appropriate without incurring any obligation to you.

Any references in this publication to non-Lenovo Web sites are provided for convenience only and do not in any manner serve as an endorsement of those Web sites. The materials at those Web sites are not part of the materials for this Lenovo product, and use of those Web sites is at your own risk.

Any performance data contained herein was determined in a controlled environment. Therefore, the result obtained in other operating environments may vary significantly. Some measurements may have been made on development-level systems and there is no guarantee that these measurements will be the same on generally available systems. Furthermore, some measurements may have been estimated through extrapolation. Actual results may vary. Users of this document should verify the applicable data for their specific environment.

© Copyright Lenovo 2019, 2023

Trademarks

LENOVO, LENOVO logo, and THINKSYSTEM are trademarks of Lenovo. All other trademarks are the property of their respective owners. © 2023 Lenovo.

Important notes

Processor speed indicates the internal clock speed of the microprocessor; other factors also affect application performance.

CD or DVD drive speed is the variable read rate. Actual speeds vary and are often less than the possible maximum.

When referring to processor storage, real and virtual storage, or channel volume, KB stands for 1 024 bytes, MB stands for 1 048 576 bytes, and GB stands for 1 073 741 824 bytes.

When referring to hard disk drive capacity or communications volume, MB stands for 1 000 000 bytes, and GB stands for 1 000 000 000 bytes. Total user-accessible capacity can vary depending on operating environments.

Maximum internal hard disk drive capacities assume the replacement of any standard hard disk drives and population of all hard-disk-drive bays with the largest currently supported drives that are available from Lenovo.

Maximum memory might require replacement of the standard memory with an optional DIMM.

Each solid-state memory cell has an intrinsic, finite number of write cycles that the cell can incur. Therefore, a solid-state device has a maximum number of write cycles that it can be subjected to, expressed as `total bytes written` (TBW). A device that has exceeded this limit might fail to respond to system-generated commands or might be incapable of being written to. Lenovo is not responsible for replacement of a device that has exceeded its maximum guaranteed number of program/erase cycles, as documented in the Official Published Specifications for the device.

Lenovo makes no representations or warranties with respect to non-Lenovo products. Support (if any) for the non-Lenovo products is provided by the third party, not Lenovo.

Some software might differ from its retail version (if available) and might not include user manuals or all program functionality.

Particulate contamination

Attention: Airborne particulates (including metal flakes or particles) and reactive gases acting alone or in combination with other environmental factors such as humidity or temperature might pose a risk to the device that is described in this document.

Risks that are posed by the presence of excessive particulate levels or concentrations of harmful gases include damage that might cause the device to malfunction or cease functioning altogether. This specification sets forth limits for particulates and gases that are intended to avoid such damage. The limits must not be viewed or used as definitive limits, because numerous other factors, such as temperature or moisture content of the air, can influence the impact of particulates or environmental corrosives and gaseous contaminant transfer. In the absence of specific limits that are set forth in this document, you must implement practices that maintain particulate and gas levels that are consistent with the protection of human health and safety. If Lenovo determines that the levels of particulates or gases in your environment have caused damage to the device, Lenovo may condition provision of repair or replacement of devices or parts

on implementation of appropriate remedial measures to mitigate such environmental contamination. Implementation of such remedial measures is a customer responsibility.

Table 6. Limits for particulates and gases

Limits for particulates and gases

Contaminant	Limits
Particulate	• The room air must be continuously filtered with 40% atmospheric dust spot efficiency (MERV 9) according to ASHRAE Standard 52.2[1]. • Air that enters a data center must be filtered to 99.97% efficiency or greater, using high-efficiency particulate air (HEPA) filters that meet MIL-STD-282. • The deliquescent relative humidity of the particulate contamination must be more than 60%[2]. • The room must be free of conductive contamination such as zinc whiskers.
Gaseous	• Copper: Class G1 as per ANSI/ISA 71.04-1985[3] • Silver: Corrosion rate of less than 300 Å in 30 days

[1] ASHRAE 52.2-2008 - *Method of Testing General Ventilation Air-Cleaning Devices for Removal Efficiency by Particle Size*. Atlanta: American Society of Heating, Refrigerating and Air-Conditioning Engineers, Inc.

[2] The deliquescent relative humidity of particulate contamination is the relative humidity at which the dust absorbs enough water to become wet and promote ionic conduction.

[3] ANSI/ISA-71.04-1985. *Environmental conditions for process measurement and control systems: Airborne contaminants*. Instrument Society of America, Research Triangle Park, North Carolina, U.S.A.

Telecommunication regulatory statement

This product may not be certified in your country for connection by any means whatsoever to interfaces of public telecommunications networks. Further certification may be required by law prior to making any such connection. Contact a Lenovo representative or reseller for any questions.

Electronic emission notices

When you attach a monitor to the equipment, you must use the designated monitor cable and any interference suppression devices that are supplied with the monitor.

Additional electronic emissions notices are available at:

http://thinksystem.lenovofiles.com/help/index.jsp

Taiwan region BSMI RoHS declaration

單元 Unit	限用物質及其化學符號 Restricted substances and its chemical symbols					
	鉛Lead (PB)	汞Mercury (Hg)	鎘Cadmium (Cd)	六價鉻 Hexavalent chromium (Cr^{+6})	多溴聯苯 Polybrominated biphenyls (PBB)	多溴二苯醚 Polybrominated diphenyl ethers (PBDE)
機架	○	○	○	○	○	○
外部蓋板	○	○	○	○	○	○
機械組合件	–	○	○	○	○	○
空氣傳動設備	–	○	○	○	○	○
冷卻組合件	–	○	○	○	○	○
內存模組	–	○	○	○	○	○
處理器模組	–	○	○	○	○	○
電纜組合件	–	○	○	○	○	○
電源供應器	–	○	○	○	○	○
儲備設備	–	○	○	○	○	○
電路卡	–	○	○	○	○	○
光碟機	–	○	○	○	○	○
雷射器	–	○	○	○	○	○

備考1. 〝超出0.1 wt %〞及〝超出0.01 wt %〞係指限用物質之百分比含量超出百分比含量基準值。

Note1 : “exceeding 0.1wt%” and “exceeding 0.01 wt%” indicate that the percentage content of the restricted substance exceeds the reference percentage value of presence condition.

備考2. 〝○〞係指該項限用物質之百分比含量未超出百分比含量基準值。

Note2 : “○”indicates that the percentage content of the restricted substance does not exceed the percentage of reference value of presence.

備考3. 〝-〞係指該項限用物質為排除項目。

Note3 : The “-“ indicates that the restricted substance corresponds to the exemption.

0220

Taiwan Region import and export contact information

Contacts are available for Taiwan Region import and export information.

委製商/進口商名稱: 台灣聯想環球科技股份有限公司
進口商地址: 台北市南港區三重路 66 號 8 樓
進口商電話: 0800-000-702

Index

A

AutoSupport
  registering the controller serial number 53
AutoSupport messages
  prerequisites for replacing caching modules when they go offline 17

B

battery, NVMEM
  considerations for replacing in a controller 23
  prerequisites for replacing 23
battery, RTC
  considerations for replacing in a controller 72
boot media
  copying the image using a USB flash drive 69
  installing 39, 68
  removing 39, 68
boot media, locating 39, 68
boot media, moving 39
boot media, removing 39, 68
boot media, replacing 68
booting
  installing a controller module in a system 44
  installing a controller module in a system after chassis replacement 82
  reinstalling a controller module in a system 20, 26, 57, 63, 75

C

cabling
  controllers after running diagnostics 50
  HA pairs after running diagnostics 50
caching module
  adding 19
  installing 19, 38
  locating 19, 38
  moving 38
  removing 19, 38
  replacing 19
  running diagnostics 21
  running system-level diagnostics 21
caching module diagnostics
  running 21
caching module system-level diagnostics
  running 21
caching modules
  prerequisites for replacing 17
cards, M.2 PCIe
  prerequisites for replacing 17
chassis
  considerations for installing within the equipment rack or system cabinet 81
  considerations for moving component 76
  considerations for removing from within the equipment rack or system cabinet 81
  considerations for replacing 76
  considerations for replacing within the equipment rack or system cabinet 81
  replacing 76
  running diagnostics 84
  running system-level diagnostics 84
  verifying and setting HA state of 83
collecting service data 106
components 5
  considerations for replacing the chassis 76
contamination, particulate and gaseous 110
contents
  Rail kit 11
controller
  running diagnostics 47
  running system-level diagnostics 47
controller module
  installing in a system and booting 44
  installing in a system and booting after chassis replacement 82
  opening 18, 24, 37, 55, 59, 67, 73
  reinstalling in a system and booting 20, 26, 57, 63, 75
  removing the cover 18, 24, 37, 55, 59, 67, 73
  replacing 37
controller modules
  completing the replacement process 23, 29, 31–32, 54, 58, 66, 72, 76, 86
  considerations for replacing DIMMs in 58
  considerations for replacing NVMEM battery in 23
  considerations for replacing PCIe cards in 54
  considerations for replacing RTC battery in 72
  prerequisites for replacing 32
  prerequisites for replacing caching modules in 17
  shutting down 17, 23, 35, 54, 58, 67, 73, 76
  tasks for replacing 37
  verifying and setting HA state of 46
controllers
  considerations for replacing DIMMs in controller modules 58
  considerations for replacing NVMEM battery in controller modules 23
  considerations for replacing PCIe cards in controller modules 54
  considerations for replacing RTC battery in controller modules 72
  preparing to replace when using Storage Encryption 35
  prerequisites for replacing caching modules in controller modules 17
  recabling after running diagnostics 50
  shutting down 17, 23, 35, 54, 58, 67, 73, 76
copying an image to the boot media
  using a USB flash drive 69
creating a personalized support web page 105
custom support web page 105

D

degraded controllers
  introduction to shutting down 17, 23, 35, 54, 58, 67, 72
  shutting down 17, 23, 35, 54, 58, 67, 73, 76
device failures
  running diagnostics after 101
diagnostics
  running after device failure 101
  running after hardware installation 98
  running after slow system response 94
  running after system installation 89
  running after system panic 92
DIMMs
  considerations for replacing 58
  considerations for replacing in a controller 58
  DIMMs
    error correction codes (ECC), considerations for 58
  installing 41, 60
  locating 41, 60

© Copyright Lenovo 2019, 2023

moving 41
removing 41, 60
replacing 60
running diagnostics 63
running system-level diagnostics 63
verifying there is no content in NVMEM 60
DIMMs diagnostics
running 63
DIMMs system-level diagnostics
running 63

E

error correction codes (ECC)
DIMMs, considerations for 58

F

failures
running diagnostics after device 101
fan
hot swapping 31
FRUs
preparing to replace controllers or NVRAM adapters when using Storage Encryption 35

G

gaseous contamination 110
Getting help 105

H

HA pairs
recabling after running diagnostics 50
HA state
verifying and setting for controller modules 46
verifying and setting for the chassis 83
HA systems
verifying system ID changes on replacement controllers running ONTAP 51
hardware
tasks for replacing controller module 37
hardware installations
running diagnostics after 98
hardware service and support telephone numbers 106
help 105
hot-swapping
fan 31, 79
power supply 29, 77

I

important notices 110
installing
chassis in the equipment rack or system cabinet 81
controller module in a system and booting 44
controller module in a system and booting after chassis replacement 82
the boot media 39, 68
the NVMEM batteries 25, 40
installing within the equipment rack or system cabinet
chassis, considerations for 81
interconnect diagnostics
running 84
interconnect system-level diagnostics
running 84
introduction 1

L

licenses
installing for the replacement controller in ONTAP 53
LIFs
verifying home ports 53
locating the boot media 39, 68

M

M.2 PCIe card
adding 19
installing 19, 38
locating 19, 38
moving 38
removing 19, 38
replacing 19
running diagnostics 21
running system-level diagnostics 21
M.2 PCIe card diagnostics
running 21
M.2 PCIe card system-level diagnostics
running 21
M.2 PCIe cards
prerequisites for replacing 17
management software 3
messages, AutoSupport
prerequisites for replacing caching modules when they go offline 17
modules, caching
prerequisites for replacing 17
modules, controller
considerations for replacing DIMMs in 58
considerations for replacing NVMEM battery in 23
considerations for replacing PCI cards in 54
considerations for replacing RTC battery in 72
shutting down 17, 23, 35, 54, 58, 67, 73, 76
motherboard diagnostics
running 47
motherboard system-level diagnostics
running 47
moving the boot media 39
moving the NVMEM batteries
to new controller modules 40

N

new controller modules
moving the NVMEM batteries 40
non-disruptive replacements
fan 31, 79
power supply 29, 77
notes, important 110
notices 109
NVMEM batteries
installing 25, 40
moving to new controller modules 40
removing 25, 40
replacing 25
NVMEM battery
considerations for replacing in a controller 23
prerequisites for replacing 23
running diagnostics 27
running system-level diagnostics 27
NVMEM battery diagnostics
running 27
NVMEM battery system-level diagnostics
running 27

NVRAM adapters
preparing to replace when using Storage Encryption 35

O

online command-line help 88
opening
controller module 18, 24, 37, 55, 59, 67, 73
operations
workflow for completing system restoration 50

P

particulate contamination 110
PCIe cards
considerations for replacing in a controller 54
installing 56
installing when replacing a controller module 43
moving when replacing a controller module 43
removing 56
removing when replacing a controller module 43
replacing 56
replacing in a controller 54
PCIe cards, M.2
prerequisites for replacing 17
power supplies
hot swapping 77, 79
power supply
hot swapping 29
procedures, shutdown
controller 17, 23, 35, 54, 58, 67, 73, 76

Q

quorum
checking on the SCSI blade 34

R

rail kit installation instructions 11
real-time clock battery
considerations for replacing in a controller 72
Rear view of the system 6
reassigning disks
finding the correct procedure for your configuration 51
Registering the controller serial number
using AutoSupport 53
reinstalling
controller module in a system and booting 20, 26, 57, 63, 75
removing
chassis from the equipment rack or system cabinet 81
the controller module from the chassis 18, 24, 37, 55, 59, 67, 73
the controller module from the chassis when replacing the chassis 80
the NVMEM batteries 25, 40
removing from the chassis
a controller module 18, 24, 37, 55, 59, 67, 73
a controller module when replacing the chassis 80
removing from within the equipment rack or system cabinet
chassis, considerations for 81
removing the cover
of a controller module 18, 24, 37, 55, 59, 67, 73
replacement controllers
installing licenses for 53
verifying system ID changes on HA systems running ONTAP 51
replacement procedures
prerequisites for controller modules 32
replacing
chassis 76
chassis from within the equipment rack or system cabinet 81
controller module 37
DIMMs in a controller, considerations for 58
DIMMs, considerations for 58
fan 31, 79
NVMEM battery in a controller, considerations for 23
NVMEM battery, prerequisites for 23
PCIe cards 54
PCIe cards in a controller, considerations for 54
power supply 29, 77
RTC battery in a controller, considerations for 72
the chassis, considerations for 76
the NVMEM batteries 25
replacing from within the equipment rack or system cabinet
chassis, considerations for 81
replacing the boot media 68
requirements
for running system-level diagnostics 87
restoring
Storage Encryption functionality after controller module or NVRAM replacement 53
RTC battery
considerations for replacing in a controller 72
installing 74
locating 74
removing 74
replacing 74
running
system-level diagnostics 87
running diagnostics
after device failures 101
after hardware installations 98
after slow system responses 94
after system installations 89
after system panics 92
system-level 87
system-level requirements for 87

S

safety iii
SCSI blade
checking quorum 34
security advisories 3
service and support
before you call 105
hardware 106
software 106
service data 106
shutdown procedures i
controllers 17, 23, 35, 54, 58, 67, 73, 76
slow system response
running diagnostics for 94
software service and support telephone numbers 106
Storage Encryption
preparing for NVRAM adapter or controller replacement 35
restoring functionality after controller module or NVRAM replacement 53
storage systems
shutting down a controller in 17, 23, 35, 54, 58, 67, 73, 76
support web page, custom 105
swapping out
fan 31, 79
power supply 29, 77
system configuration
verifying and setting the HA state of the chassis 83
system IDs
verifying changes on HA systems running ONTAP 51
system operations

© Copyright Lenovo 2019, 2023

workflow for completing system restoration 50
system restoration
workflow for 50
system-level diagnostics 87
requirements for running 87
systems
considerations for replacing DIMMs in controller modules 58
considerations for replacing NVMEM battery in controller modules 23
considerations for replacing PCIe cards in controller modules 54
considerations for replacing RTC battery in controller modules 72
prerequisites for replacing caching modules in controller modules 17
running diagnostics after installation failures 89
running diagnostics after panics 92
running diagnostics for slow response 94
shutting down a controller in 17, 23, 35, 54, 58, 67, 73, 76

T

Taiwan region BSMI RoHS declaration 112
Taiwan Region import and export contact information 112
Tech Tips 3
telecommunication regulatory statement 111
telephone numbers 106
trademarks 110
troubleshooting
device failures 101
hardware installations 98
requirements for running system-level diagnostics 87
running system-level diagnostics 87
slow system response 94
system installation 89
system panics 92

U

USB flash drive
copying an image to the boot media 69

V

Verify NVMEM has no contents
when replacing a DIMM 60
verifying home ports
on LIFs 53

W

workflows
completing system restoration 50
preparing system for controller replacement controllers
workflow for preparing to replace 34